S-20/S-200 Series High Tension Magneto

CONTINENTAL IGNITION SYSTEMS

SERVICE SUPPORT MANUAL

Technical Portions Approved by the FAA

Publication X42002-3

©2011 CONTINENTAL MOTORS, INC.

AUG 2011

Supersedure Notice

This manual is a revision of the service instructions contained in X42002-2, published in September 2010. Upon FAA Approval and release of this document, previous versions of X42002 are superseded and should not be used for S-20/S-200 Series magneto maintenance, inspection or overhaul.

Effective Changes for this Manual

0 ..... 31 August 2011			

List of Effective Pages

Document Title: S-20/S-200 Series High Tension Magneto Service Support Manual
Publication Number: X42002-3 Initial Publication Date: 31 August 2011

Page	Change	Page	Change	Page	Change	Page	Change
Cover	0						
A	0						
i-xvi	0						
1-1 thru 1-2	0						
2-1 thru 2-6	0						
3-1 thru 3-6	0						
4-1 thru 4-6	0						
5-1 thru 5-2	0						
6-1 thru 6-10	0						
7-1 thru 7-20	0						
8-1 thru 8-2	0						
9-1 thru 9-24	0						
10-1 thru 10-2	0						
11-1 thru 11-40	0						

Published and printed in the U.S.A. by Continental Motors, Inc.

Available exclusively from the publisher: P.O. Box 90, Mobile, AL 36601

Copyright© 2011 Continental Motors, Inc. All rights reserved. This material may not be reprinted, republished, broadcast, or otherwise altered without the publisher's written permission. This manual is provided without express, statutory, or implied warranties. The publisher will not be held liable for any damages caused by or alleged to be caused by use, misuse, abuse, or misinterpretation of the contents. Content is subject to change without notice. Other products and companies mentioned herein may be trademarks of the respective owners.

Service Document and Technical References

Relevant technical content of the service documents which apply to S-20 and S-200 Series Magneto Ignition Systems listed below have been incorporated in this manual. Active Continental Motors service documents are available on the Continental Motors web site, http://continentalmotors.aero. Refer to “Contact Information” on page viii for Continental Motors web site details.

Due to the continuing nature of FAA Airworthiness Directives and the Service Bulletins associated with them, some Service Bulletins issued prior to the issuance of this manual are still considered active. Consult the most recent revision of Continental Motors Ignition Systems Master Service Manual Index (Publication X41005) for a complete listing of active magneto Service Bulletins. Service Bulletins affecting S-20 and S-200 Series Magnetos and/or applicable Gold Seal Harnesses issued subsequent to issuance of this manual shall be considered to supplement or supersede applicable information in this manual.

Bulletin Number	Bulletin Title	Issue Date
556C	Shouldered Magneto Drive Shaft Bushing, Change from Sintered Iron to Machined Steel	7/75
583	Ignition Switches, Rotary Action, Key or Lever Actuated Twist-to-Start, Push-to-Start, Twist-to-Start/Push-to-Prime Types	4/76
623A	Inspection of Impulse Coupling Cam Assemblies	8/94
631	Recommended Lubricant for Tapered Drive on TCM magnetos	9/89
634	Replacement of P/N 10-357173 Breaker Assemblies Exhibiting Batch Code 0690 and P/N 10-357174 Breaker Assemblies Exhibiting Batch Code 4289 through 1790 or Subject Breakers P/N's with Illegible Batch Codes	12/90
635	Gold Seal Harnesses	5/91
639	Proper Installation of Impulse Couplings	3/93
640	New Service Document Format	2/1/94
CSB641	Possible Open Condition of SC-20, SC-200 and S-1200 Series Magneto Capacitor, P/N 10-349276	2/1/94
SIL642	Manufacturing Number (Serial Number) Interpreting	2/1/94
SB643	Maintenance Intervals for all TCM and Bendix Aircraft Magneto and Related Equipment	2/8/94
MSB644	Replacement of Magneto Coils and Rotating Magnets	4/4/94
MSB645	Inspection of Riveted Impulse Couplings and Stop Pins	4/4/94
SIL646	History of the Requirements to Replace Magneto Coils and Rotating Magnets	9/14/94
SIL647	SC-20 and SC-200 Series Magneto Product Line	10/3/94
SIL648	Optional Conversion to “Shower-of-Sparks” Ignition	10/18/94
SB650	Stop Pin Procedures	3/17/95
SB653	Hot Magneto Test	5/23/95
SB654A	Improved Capacitor, P/N 10-400604, for Certain Short Cover S-20 and S-200 Series Magnetos	11/15/96
SIL656	Relay Vibrator Supersedure	5/17/96
SIL657A	Supersedure of P/N 10-163136 and 10-361638 Covers and of 10-361637 Cover Kit	10/09/97
SB658	Distributor Gear Maintenance	8/16/96
SB663A	Two Wire Magneto Tachometer Breaker Contact Assembly P/N 10-400507	1/24/07
SB664	Magneto Capacitor P/N 10-400558 Replacement	9/6/02
SB665A	Magneto Capacitor P/N 10-400615 Inspection and Replacement	8/20/04
CSB 668	Inspection of Ignition Harness Attachment Plate	5/18/10

Service Documents Released After Publication

Continental Motors strives to provide clear, concise, and accurate information and instructions based on best known engineering data at the time of publication. Ongoing process improvements may change a specification or procedure after a manual is released. Service documents, defined on Chapter 1, expedite customer notification and serve as the prevailing instruction over conflicting information until the new information is incorporated in the manual text. As service documents are received, note the service document number, release date, title, and applicable section affected by the service document in the blank cells below and insert a copy of the service document behind the last page of this section. Make pen & ink corrections, where appropriate, to the original text in the manual with a citation to the service document; i.e. see SB9X-1. For paragraphs or entire sections, draw an "X" through the affected information in the manual and reference the service document containing the correction.

Service Bulletins Release After This Manual

Bulletin Number: _____ **Release Date:** ___/___/___ **Affected Sections:** _____

Title: _____

Bulletin Number: _____ **Release Date:** ___/___/___ **Affected Sections:** _____

Title: _____

Bulletin Number: _____ **Release Date:** ___/___/___ **Affected Sections:** _____

Title: _____

Bulletin Number: _____ **Release Date:** ___/___/___ **Affected Sections:** _____

Title: _____

Bulletin Number: _____ **Release Date:** ___/___/___ **Affected Sections:** _____

Title: _____

Bulletin Number: _____ **Release Date:** ___/___/___ **Affected Sections:** _____

Title: _____

Bulletin Number: _____ **Release Date:** ___/___/___ **Affected Sections:** _____

Title: _____

Bulletin Number: _____ **Release Date:** ___/___/___ **Affected Sections:** _____

Title: _____

Bulletin Number: _____ **Release Date:** ___/___/___ **Affected Sections:** _____

Title: _____

Bulletin Number: _____ **Release Date:** ___/___/___ **Affected Sections:** _____

Title: _____

Bulletin Number: _____ **Release Date:** ___/___/___ **Affected Sections:** _____

Title: _____

Scope and Purpose of this Manual

This manual provides installation, operation, maintenance and overhaul instructions applicable to S-20 and S-200 series magnetos manufactured by Continental Motors. Instructions apply only to the magneto series listed; for magnetos, engines and accessories beyond the scope of this document, refer to the appropriate instructions for continued airworthiness.

Exploded assembly illustrations accompany instructions throughout the manual. Parts in illustrations (Figure A) are identified with numerical callouts (indices). Corresponding parts listings follow the illustrations for reference. The first time instructions refer to an illustration, the figure number is identified in parentheses, followed by the callout. In subsequent parts references, only the callout will be specified unless the referenced illustration changes.

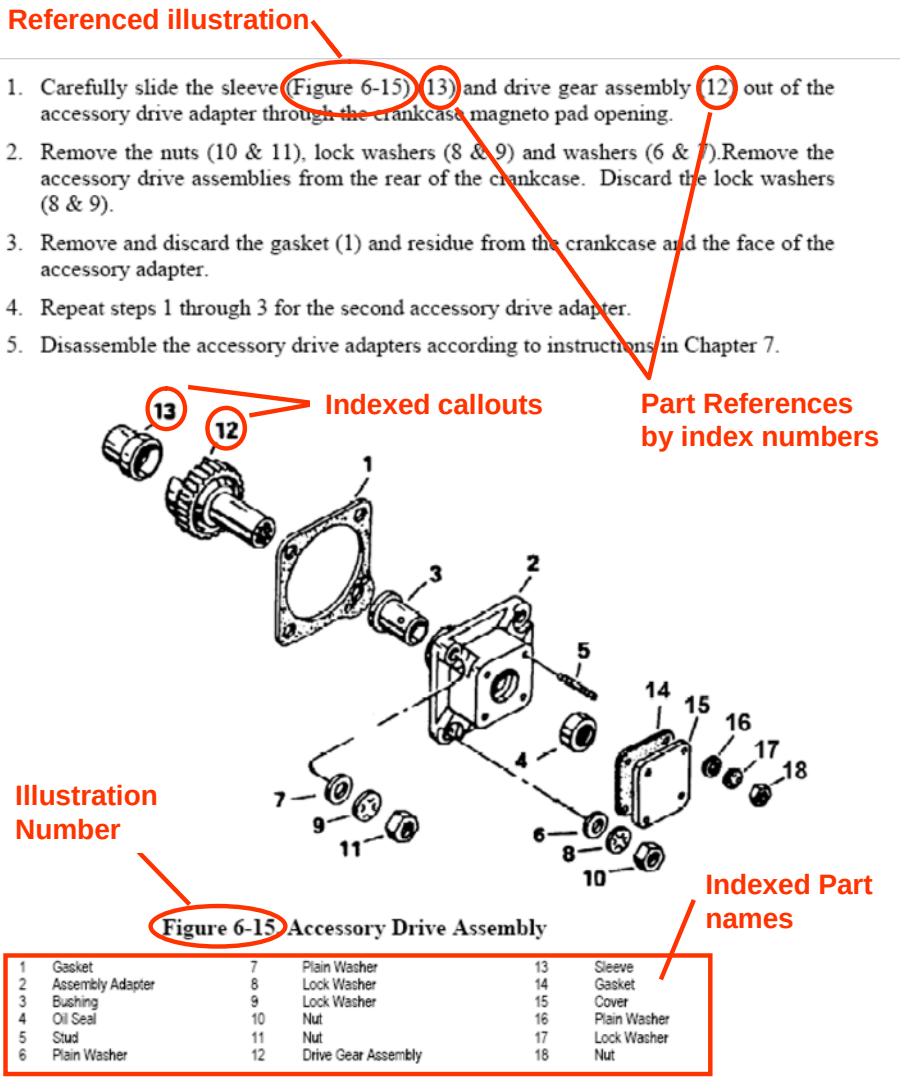

Figure A. Figure and Index Reference

Advisories

This manual utilizes three types of advisories; defined as follows:

WARNING

A warning emphasizes information which, if disregarded, could result in severe injury to personnel or equipment failure.

CAUTION: Emphasizes certain information or instructions, which if disregarded, may result in damage to the engine or accessories.

NOTE: Provides special interest information, which may facilitate performance of a procedure or operation of equipment.

Warnings and cautions precede the steps to which they apply; notes are placed in the manner which provides the greatest clarity. Warnings, cautions, and notes do not impose undue restrictions. Failure to heed advisories will likely result in the undesirable or unsafe conditions the advisory was intended to prevent. Advisories are inserted to ensure maximum safety, efficiency, and performance. Abuse, misuse, or neglect of equipment can cause eventual engine malfunction or failure.

Publications

Service Documents

Six categories of Service Documents may be issued by Continental Motors ranging from mandatory (Category 1) to informational (Category 6). Definitions of the categories are listed below:

NOTE: Upon FAA approval, Continental Motors publishes service documents for immediate availability on our web site, http://continentalmotors.aero. The service document cover page indicates the magnetos affected by the service document. Service documents may alter or replace the manufacturer's Instructions for Continued Airworthiness. Insert a copy of applicable Service Documents in affected manuals until the service document instructions are incorporated in the manual, or the service document is cancelled or superseded.

Category 1: Mandatory Service Bulletin (MSB)

Used to identify and correct a known or suspected safety hazard which has been incorporated in whole or in part into an Airworthiness Directive (AD) issued by the FAA or have been issued at the direction of the FAA by the manufacturer requiring compliance with an already-issued AD (or an equivalent issued by another country's airworthiness authority). May contain updates to Instructions for Continued Airworthiness to address a safety issue.

Category 2: Critical Service Bulletin (CSB)

This category identifies a condition that threatens continued safe operation of an aircraft, persons or property on the ground unless some specific action (inspection, repair, replacement, etc.) is taken by the owner or operator. Documents in this category are candidates for incorporation into an FAA Airworthiness Directive. May contain updates to Instructions for Continued Airworthiness to address a safety issue.

Category 3: Service Bulletin (SB)

Information which the product manufacturer believes may improve the inherent safety of an aircraft or

aircraft component; this category includes the most recent updates to Instructions for Continued Airworthiness.

Category 4: Service Information Directive (SID)

The manufacturer directs the owner/operator/mechanic in the use of a product to enhance safety, maintenance or economy. May contain updates to Instructions for Continued Airworthiness in the form of maintenance procedures or specifications.

Category 5: Service Information Letter (SIL)

This category includes all information (not included in categories 1 through 4) that may be useful to the owner/operator/technician. May contain updates to Instructions for Continued Airworthiness for optional component installations, which are not covered in the Applicable Operator, Maintenance, or Overhaul Manuals.

Category 6: Special Service Instruction (SSI)

This category is used to address an issue limited to specific model and/or serial number engines. Continental Motors will distribute SSI notification directly to the affected engine's owners. SSIs will not be included in the general service document set but will be made available through Customer Service to owners of the affected engines only. An SSI may update the applicable engine's Instructions for Continued Airworthiness.

Publication Access

Continental Motors web site provides an array of benefits including access to electronic versions of Continental Motors technical publications (manuals, service documents, and parts catalogs) via the Internet. Internet Service memberships are free to Continental Motors engine owners. Our Internet Service is available to Fixed Base Operators and Repair Stations with a paid subscription fee. Contact an authorized Continental Motors distributor to discuss service subscription options and pricing or visit our web site (See "Contact Information" on page viii).

Printed Continental Motors publications may be ordered through a Continental Motors authorized distributors or via our web site. See "Contact Information" on page viii.

Publication Changes

The instructions in this manual represent the best and most complete information available at the time of publication. Product or process improvements may trigger changes to existing product design specifications or procedures contained in publications. As new technical information becomes available, Continental Motors will make the information available to the customer.

WARNING

New information may be contained in Continental Motors service documents. Service documents applicable to engines and accessories within the scope of this manual must be complied with as defined in these documents. This manual and other related publications noted herein constitute the Instructions for Continued Airworthiness (ICAs) prepared by Continental Motors and approved by the Federal Aviation Administration (FAA).

Continental Motors releases publication changes in the form of either change pages or complete publication revisions, depending upon the extent of change. Service Documents may supplement or replace technical information contained in one publication or an entire series of publications. Such Service Documents represent a change to the published ICA until the individual publications incorporate the latest technical information.

Document updates are available via our web site upon notification of FAA document approval. Printed publication subscribers receive printed changes and revisions as they are released.

Document revisions are released if the update changes more than 50% of the contents of a publication. Revisions replace the previous version of a publication from cover to cover. Minor corrections are released as change pages to the original publication, identified with a change number and effective change date in the page footer. Information on the page that changed from the previous edition is identified by a vertical, six-point black line (Figure B), referred to as a "change bar" in the outside margin of the page. A change page replaces only the previous edition of the affected page.

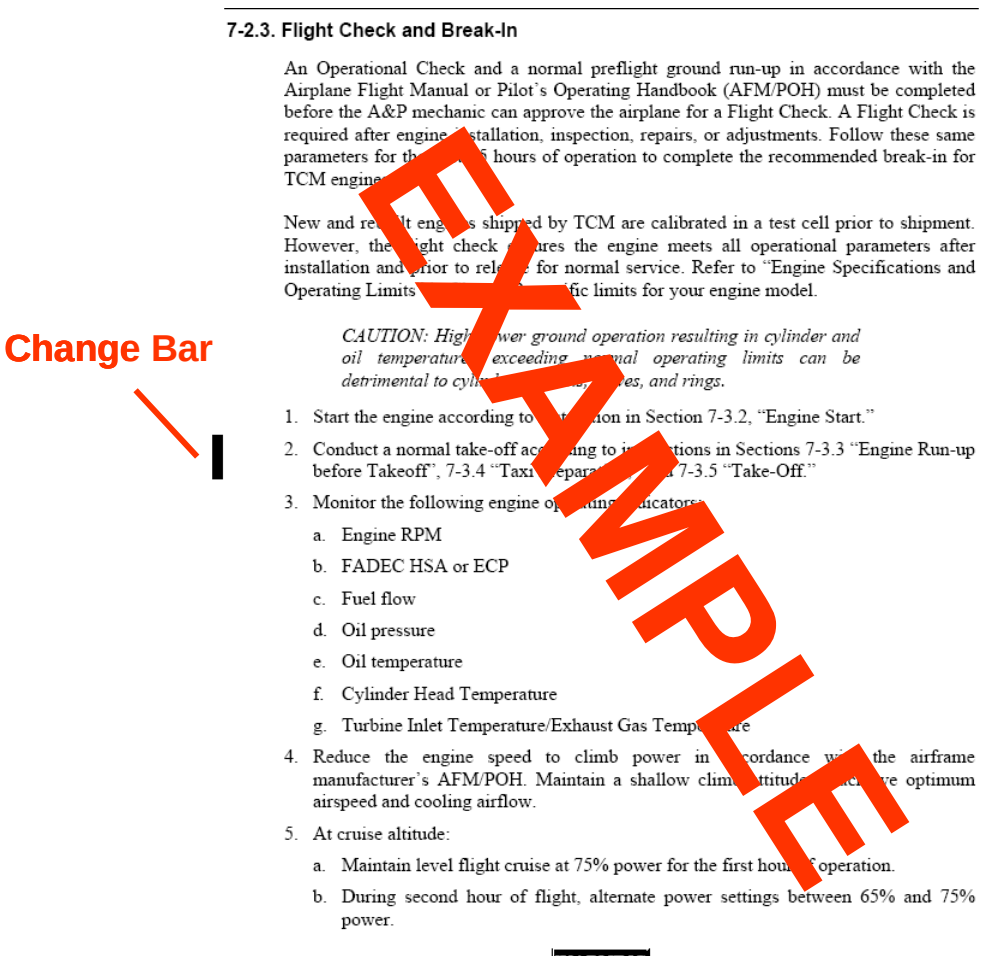

7-2.3. Flight Check and Break-In

An Operational Check and a normal preflight ground run-up in accordance with the Airplane Flight Manual or Pilot's Operating Handbook (AFM/POH) must be completed before the A&P mechanic can approve the airplane for a Flight Check. A Flight Check is required after engine installation, inspection, repairs, or adjustments. Follow these same parameters for the 5 hours of operation to complete the recommended break-in for TCM engines.

New and rebuilt engines shipped by TCM are calibrated in a test cell prior to shipment. However, the flight check ensures the engine meets all operational parameters after installation and prior to release for normal service. Refer to "Engine Specifications and Operating Limits" for specific limits for your engine model.

CAUTION: High power ground operation resulting in cylinder and oil temperatures exceeding normal operating limits can be detrimental to cylinders, valves, and rings.

1. Start the engine according to the instruction in Section 7-3.2, "Engine Start."
2. Conduct a normal take-off according to instructions in Sections 7-3.3 "Engine Run-up before Takeoff", 7-3.4 "Taxi Preparation" and 7-3.5 "Take-Off."
3. Monitor the following engine operating indicators:
   a. Engine RPM
   b. FADEC HSA or ECP
   c. Fuel flow
   d. Oil pressure
   e. Oil temperature
   f. Cylinder Head Temperature
   g. Turbine Inlet Temperature/Exhaust Gas Temperature
4. Reduce the engine speed to climb power in accordance with the airframe manufacturer's AFM/POH. Maintain a shallow climb attitude which provides optimum airspeed and cooling airflow.
5. At cruise altitude:
   a. Maintain level flight cruise at 75% power for the first hour of operation.
   b. During second hour of flight, alternate power settings between 65% and 75% power.

Figure B. Change Page Identification

Page A of this manual contains the original publication date and an itemized list of changes issued for the technical manual (Figure C). If change pages are issued for the manual, the change will be

identified, with an effective date under the heading “Effective Changes for This Manual” on the inside front cover of the manual, Page A. The list of effective pages, itemizes the pages in each section, by change number. Original pages are designated by a 0 in the List of Effective Pages “Change” column.

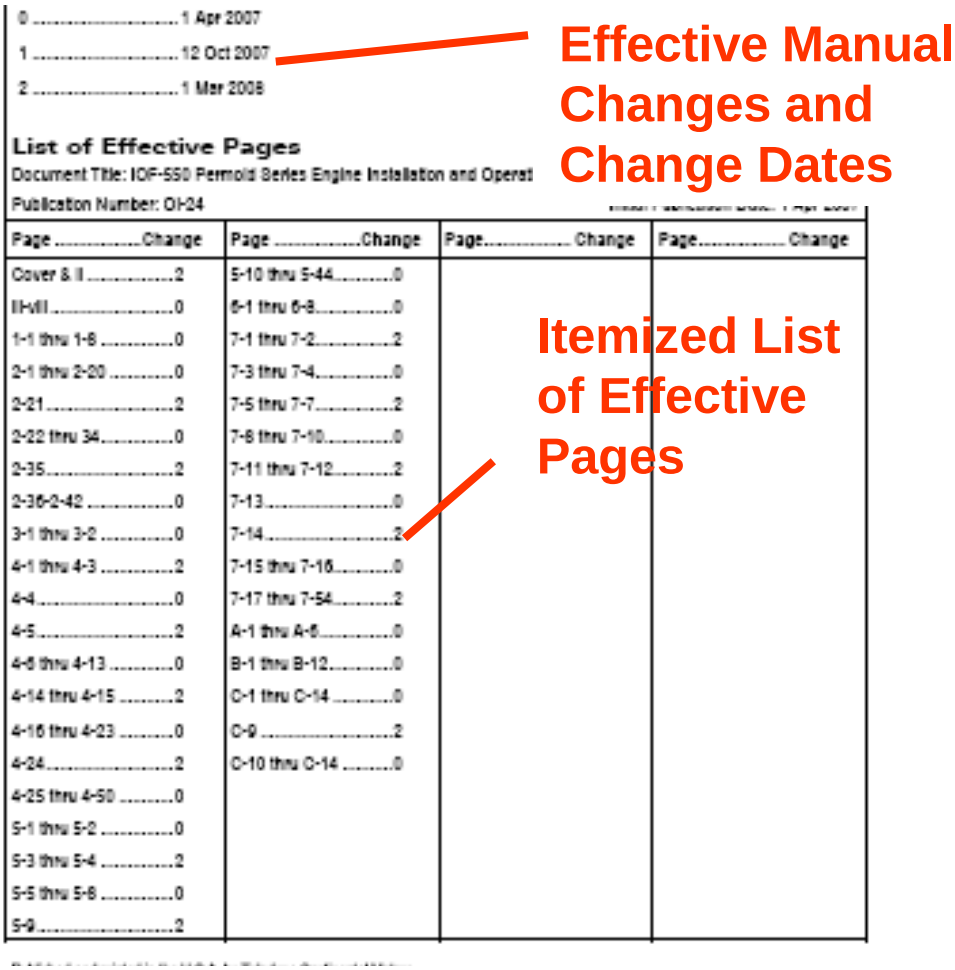

Figure C. List of Effective Pages

Suggestions and Corrections

Continental Motors solicits and encourages user comments regarding suggested changes to this manual. Direct recommended changes or questions to the attention of “Publications” at the address listed in “Contact Information” on this page or via email to CM.techpubs@continentalmotors.aero.

Contact Information

Notify Customer Service immediately, using our toll-free number, if you discover incorrect information which adversely affects safety.

Continental Motors is available to answer technical questions and encourages suggestions regarding products, parts, or service. If customers have an inquiry or require technical assistance, they should contact their local Continental Motors distributor or field representative. To contact our factory customer service department, refer to the information below:

Continental Motors, Inc.
P. O. Box 90
Mobile, AL 36601

Customer Service Department:

Toll free within the Continental United States:	1-888-826-5465
International:	1-251-438-8299

Internet: http://continentalmotors.aero.

PREFACE

NOTE: Please note the following statements from FAA Advisory Circular 20-62C entitled "ELIGIBILITY, QUALITY, AND IDENTIFICATION OF APPROVED REPLACEMENT PARTS":

Background

An increasing amount of replacement parts (including standard parts), materials, appliances, and instruments are offered for sale as being of aircraft quality when actually the quality and origin of these units are unknown. Users of such units are usually not aware of the potential hazards involved with replacement parts that are not eligible for use on certificated aircraft. Frequently such units are deceptively advertised or presented as "unused," "like new," or "remanufactured." This implies the quality of such units is equal to an original or appropriately repaired or overhauled unit.

The performance rules for replacement of parts and materials used in the maintenance and alteration of U.S.-certified aircraft are specified in Federal Aviation Regulations (FAR) 43.13 and FAR 145.205. The responsibility for the continued airworthiness of the aircraft, which includes the replacement of parts, is the responsibility of the owner/operator as outlined in FAR 91.7, FAR 121.363, and FAR 135.419.

Identification of the Approved Parts

Approved serviceable replacement parts are identified as follows:

- By an FAA Form 8130-3 (Formerly FAA Form 186), Airworthiness Approval Tag. An Airworthiness Approval Tag identifies a part or group of parts that have been approved by authorized FAA representatives.
- By an FAA Technical Standard Order (TSO) number and identification mark that indicates the part or appliance has been manufactured under FAR 37 requirements.
- By an FAA/PMA symbol, together with the manufacturer's name, trademark or symbol, part number, and the make and model of the type certificated product on which the part is eligible for installation, stamped on the part. An FAA Parts Manufacturer Approval (FAA/PMA) is issued under FAR 21.305. The make and model information may be on a tag attached to the part.
- By shipping ticket, invoice, or other document which provides evidence that the part was produced by a manufacturer holding an FAA Approved Production Inspection System issued under FAR 21, Subpart F, or by a manufacturer holding an FAA Production Certificate issued under FAR 21, Subpart G.
- By a certificate of airworthiness for export issued by a foreign government under the provisions of FAR 21, Subpart N.

Know Your Supplier

It has come to our attention that many reproduced parts and components, particularly instruments which have been manufactured by persons other than the original manufacturer, are available for purchase and installation on U.S. certificated aircraft. Often, an original part is used as a sample to produce duplicates. The reproduced parts appear to be as good as the original part; however, there are many unknown factors to be considered that may not be readily apparent to the purchaser, i.e., heat treating, plating, inspections, tests and calibrations. All too often the faulty part is not discovered until a malfunction or an accident occurs.

Summary

In accordance with FAR's, certification of materials, parts, and appliances for return to service, for use on aircraft, is the responsibility of the person or agency who signs the approval. The owner/operator, as denoted in paragraph 3 of this advisory circular, is responsible for the continued airworthiness of the aircraft. To assure continued safety in aircraft operation, it is essential that great care be used when inspecting, testing, and determining the acceptability of all parts and materials. Particular caution should be exercised when the identity of materials, parts and appliances cannot be established or when their origin is in doubt.

TABLE OF CONTENTS

1. Introduction and Specifications

1-1. General 1-1
1-2. Specifications 1-2

2. Description and Operation

2-1. General 2-1
2-2. Detailed Description 2-2
2-3. Maintenance and Overhaul Periods 2-3
2-4. S-20 and S-200 Magneto Operation 2-4
2-4.1. General Theory 2-4
2-4.2. Operation of S-200 Magneto System with Starting Vibrator 2-4
2-5. Serial Numbers 2-6
2-6. Storage 2-6

3. Testing & Troubleshooting

3-1. General 3-1
3-2. Post Overhaul Testing 3-2
3-3. Hot Magneto Test 3-4
3-4. Troubleshooting 3-4

4. Disassembly

4-1. General 4-1
4-2. Detailed Disassembly Procedures 4-1
4-2.1. Initial Inspection Disassembly 4-1
4-2.2. General Overhaul Disassembly 4-2
4-2.3. Drive Plate and Front End Hardware Disassembly 4-2
4-2.4. Impulse Coupling Disassembly 4-2
4-2.5. Rotating Magnet (Rotor) Disassembly 4-4
4-2.6. Housing Disassembly 4-5

5. Cleaning

5-1. General 5-1
5-2. Detailed Magneto Cleaning Procedures 5-1

6. Periodic Maintenance

6-1. General 6-1
6-2. Detailed Maintenance Procedures 6-2
6-2.1. Contact Assemblies 6-2
6-2.2. Impulse Couplings 6-4

6-2.3. 500 Hour Inspection 6-7

7. General Overhaul

7-1. General 7-1

7-2. Detailed Overhaul Procedures 7-2

7-2.1. Magneto Disassembly 7-2
7-2.2. Distributor Gear Inspection 7-2
7-2.3. Cam, Washer and Pinion Gear Inspection 7-5
7-2.4. Distributor Block Inspection 7-5
7-2.5. Capacitor Inspection 7-9
7-2.6. Coil and Clamp Inspection 7-10
7-2.7. Impulse Coupling and Related Component Inspection 7-11
7-2.8. Magneto Housing and Cover Inspection 7-15
7-2.9. Rotating Magnet Inspection 7-18
7-2.10. Sleeve Bearing Inspection 7-19
7-2.11. Contact Assembly Inspection 7-19

8. Repair

8-1. General 8-1

8-2. Detailed Repair Procedures 8-1

8-2.1. Coil Pad Repair 8-1

9. Assembly

9-1. General 9-1

9-2. Detailed Assembly Procedures 9-2

9-2.1. Bearing, Pinion Gear and Cam Assembly 9-2
9-2.2. Magneto Coil Installation 9-5
9-2.3. Distributor Block and Gear Assembly 9-5
9-2.4. Rotor Installation 9-6
9-2.5. Contact Assembly Installation 9-7
9-2.6. Capacitor Installation 9-8
9-2.7. Oil Seal and Oil Slinger Installation 9-10
9-2.8. Impulse Coupling Assembly and Installation 9-11
9-2.9. Magneto Internal Timing 9-16
9-2.10. Cover Installation 9-19
9-2.11. Plug Installation 9-20
9-2.11.1. Non-Pressurized Magneto Plug Installation 9-20
9-2.11.2. Pressurized Magneto Plug Installation 9-20
9-2.12. Data Plate Installation 9-20
9-2.13. Final Assembly 9-21
9-2.14. Post-Overhaul Test 9-21

9-3. Magneto Installation on Engine 9-22

10. Special Tools, Equipment and Supplies

10-1. Special Tool and Consumable Supply List 10-1

10-2. Illustrated Special Tools and Fixtures 10-2

11. Illustrated Parts List

11-1. Equipment Covered 11-1
11-2. Superseded, Discontinued and Interchangeable Magnetos 11-4
11-3. Illustrated Parts Lists by Magneto Series 11-8
11-4. Switch Terminal Kits 11-32
11-5. Short Cover Conversion Kits 11-34
11-6. Numerical Parts List 11-36

LIST OF TABLES

Table 1-1. Abbreviations 1-1
Table 1-2. Table of Leading Particulars 1-2
Table 2-1. Legacy Magneto Serial Number Code 2-8
Table 2-2. Current Magneto Serial Number Code (since Jan 2001) 2-9
Table 2-3. D-2000 Supersedure 2-10
Table 3-1. Troubleshooting Chart 3-6
Table 7-1. Capacitor Test Values 7-7
Table 10-1. Special Tools and Consumable Supplies 10-1
Table 10-2. Supplier Contact Information 10-2
Table 11-1. Equipment Covered 11-1
Table 11-2. Superseded, Discontinued & Interchangeable Items 11-2
Table 11-3. Switch Terminal (“P-Lead”) Kits 11-6
Table 11-4. Terminal Kit Spares 11-6
Table 11-5. D-2000 Series Magnetos 11-7
Table 11-6. D-3000 Series Magnetos 11-10
Table 11-7. Spare Elbow Leads and 4 Cylinder D-2000 and D-3000 Gold Seal® Harnesses 11-13
Table 11-8. 6 & 8 Cylinder D-2000 and D-3000 Gold Seal® Harnesses 11-14
Table 11-9. Numerical Parts List 11-15

LIST OF ILLUSTRATIONS

Figure 2-1. D-3200 Magneto and Associated Components 2-1
Figure 2-2. Magneto Model Number Elements 2-2
Figure 2-3. Sample Magneto Circuit with Starting Vibrator Schematic 2-3
Figure 2-4. Lead Termination Detail 2-4
Figure 2-5. Harness Outlet Cover Configuration 2-5
Figure 2-6. Gold Seal® Cable 2-5
Figure 2-7. Magneto Data Plate 2-8
Figure 3-1. 5mm Spark Gap Setting 3-2
Figure 3-2. Pressurized Magneto Test Stand-Block Diagram 3-4
Figure 4-1. Spring Engaged with Cam 4-3
Figure 4-2. Coupling Cam Removal 4-4
Figure 4-3. Apply Heat to Release Coupling 4-4
Figure 4-4. Rotor on Support Bars for Bearing Removal 4-5
Figure 4-5. Bearing Pressing Tool in Position 4-6
Figure 4-6. Rotor on Support Bars for Small Gear and Bushing Removal .. 4-7
Figure 6-1. Check Contact Point Security 6-2
Figure 6-2. Normal Contact Point 6-2
Figure 6-3. Flyweight Terminology 6-4
Figure 6-4. Flyweight Heel Inspection 6-5
Figure 6-5. Inspection Setup 6-6
Figure 6-6. Wire Hook Configuration 6-6
Figure 6-7. Flyweight to Axle Wear Check 6-7
Figure 6-8. X Value Measurement 6-7
Figure 7-1. Distributor Gear Identification Marks 7-2
Figure 7-2. Check Electrode Security 7-3
Figure 7-3. Stress Line in Distributor Block 7-4
Figure 7-4. Check Distributor Block for Carbon Tracking 7-5
Figure 7-5. Contact Spring Height 7-5
Figure 7-6. Lubrication Identification Mark 7-6
Figure 7-7. Capacitor Date Code 7-7
Figure 7-8. Soft Flyweight Check 7-8
Figure 7-9. Inspect Flyweight Washers 7-9
Figure 7-10. Worn Drive Lug 7-10
Figure 7-11. Coupling Body Wear Points 7-10
Figure 8-1. Coil Lead Repair 8-1
Figure 8-2. Helical Coil Repair 8-2
Figure 9-1. Position Springs in Magneto Housing 9-2
Figure 9-2. Position Plate with Recess Facing Up 9-3
Figure 9-3. Kit Parts Installed in D-2000 Magneto 9-4
Figure 9-4. Spur Gear Alignment on Shaft 9-6
Figure 9-5. Contact Spring Installation 9-9
Figure 9-6. Distributor Block Timing 9-11
Figure 9-7. Dial Indicator Mounted on Housing 9-11
Figure 9-8. Shims Positioned Around the Rotating Magnet 9-13

Figure 9-9. Distributor Block Secured and Centered 9-13
Figure 9-10. Cam End View of Magneto 9-15
Figure 9-11. 11-8465 Rotor Holding Tool in Position 9-16
Figure 9-12. Timing Marks on Rotating Magnet 9-17
Figure 9-13. Rotor Timing Marks Aligned with Pointer 9-17
Figure 9-14. Painted Tooth Centered in Window 9-17
Figure 9-15. Check Impulse Coupling for Magnetism 9-20
Figure 9-16. Impulse Coupling Spring Orientation 9-21
Figure 9-17. Lift Inner End of Spring 9-21
Figure 9-18. Apply Anti-seize to Magneto Shaft 9-22
Figure 9-19. Proper Cotter Pin Installation 9-23
Figure 9-20. Typical Impulse Coupling Crack 9-23
Figure 9-21. Lead Preparation 9-25
Figure 9-22. Lead Assembly Detail 9-25
Figure 9-23. Dura Blue Lead Assembly 9-26
Figure 9-24. Eyelet Crimping Tool 9-27
Figure 9-25. Ignition Harness Assembly Tool 9-29
Figure 9-26. Formed Capacitor Leads 9-30
Figure 9-27. Lubricate Insulating Sleeve 9-32
Figure 9-28. Terminal Kit Assembly 9-33
Figure 9-29. Elbow Kit Assembly 9-33
Figure 10-1. Eyelet Pressing Tool 10-3
Figure 10-2. Harness Assembly Tool 10-3
Figure 10-3. 11-1471 Drift 10-3
Figure 10-4. 11-9998 Bearing Pressing Tool 10-4
Figure 10-5. 11-9999 Bearing Pressing Support 10-4
Figure 10-6. Support Bar Dimensions 10-5
Figure 10-7. Small Gear Support Bar Dimensions 10-5
Figure 10-8. Wood Support Block Dimensions 10-6
Figure 10-9. Dial Indicator Mounting Plate 10-6
Figure 11-1. Terminal Kit Spares 11-6
Figure 1. D-3000 Series Magneto - Exploded View 11-17
Figure 2. D-3000 Series Magneto Harness Assembly- Exploded View 11-18

Intentionally Left Blank

Section 1. Introduction and Specifications

1-1. General

This manual provides complete maintenance instructions with illustrated parts list for S-20 and S-200 Series Magnetos, manufactured by Continental Motors. S-20 and S-200 Series Magnetos convert mechanical energy into a sequenced series of high-voltage pulses for reciprocating engine ignition.

This manual is subdivided with sub-heads as listed in the Table of Contents. Revision service will be provided, as required. This manual may be inserted as Chapter 74-10 of applicable GAMA format publications.

These instructions do not cover all details or variations in equipment nor do they provide for every possible contingency to be met in connections with installation, operation, or maintenance. Should further information be desired or particular problems arise which are not covered sufficiently for purchaser's purpose, contact Continental Motors, Aircraft Products using the contact information provided under the heading “Contact Information” on page viii of this manual.

Good standard shop practices and safety precautions should be observed at all times to avoid damage to equipment and/or injury to personnel.

All maintenance instructions in this manual have been shop verified. Shop verified procedures are those by which the manufacturer has accomplished all Disassembly, Assembly, Testing and Troubleshooting by performing the functions described in this manual on equipment identical in configuration to that described.

Dimensions are provided in U.S. Standard Units. For reference, abbreviations are listed in Table 1-1.

Numbers in parentheses following part nomenclature refer to the illustrated parts in Figure 1 of the “Illustrated Parts List” unless otherwise specified.

For specific information regarding Continental Motors Ignition Harnesses, Ignition Switches, and Starting Vibrators used in conjunction with S-20 and S-200 Series Magnetos, consult the applicable service manual and all applicable service bulletins.

Service Bulletins issued subsequent to the date of this manual supersede and supplement the information contained in this manual. Such bulletins must be complied with whenever equipment covered in this manual is inspected, tested, adjusted, maintained or overhauled.

Table 1-1. Abbreviations

US Standard Unit	Abbreviation
Degrees Fahrenheit	°F
Inch	in.
Inch Pound	in-lbs.
Pound (Mass)	lb.
Standard Cubic Feet Per Hour	SCFH
Pounds per Square Inch, Gauge	psig

1-2. Specifications

Table 1-2. Table of Leading Particulars

Subject	Data
Lubrication & Compounds	
Bearing Grease, Gears	Magneto Grease, Part No. 10-400550-1
Cam, Cam Follower Felt	Breaker Felt Lubricant, Part No. 10-86527
Distributor Block Bushing, Felt Washer	Distributor Block Lubricant, Part No. 10-391200
Housing Pole Shoes, Rotor Pole Pieces	Silicone-Free Rust Preventive
Impulse Coupling Spring	Light Oil
Magneto Shaft Taper	Part No. 646943
Oil Seal, Sleeve Bearing	SAE 30 Oil
Distributor Block, Buna Rubber	Distributor Block Coating, Part No. 10-391400
Testing	
Coming-in-speed	150 RPM
Spark gap setting	0.157 in. (4mm)
Tolerances	
Cam Washer Thickness	0.095±0.010
Capacitor	0.375 µfarads ± 10% 1.0 ohm feed through (maximum) 0.4 µAmpere leakage (maximum) at 400 VDC
Coil	Primary 0.2 to 0.6 ohms Secondary 12000 to 16000 ohms
Contact Point Clearance	
Main, Retard and Uninsulated Contacts	0.018 ± 0.006 in.
Tachometer, Insulated Contacts	0.019 ± 0.003 in.
"E" Gap	10° ± 4°
Pressurized Magneto Leakage	2.4 to 11.8 SCFH at 2.9 to 3.1 psig
Torques	
Cover Screws	20 to 25 in-lbs.
Cam Screw[1]	21 to 25 in-lbs.
Capacitor Screw	8 to 12 in-lbs. (in cover) 20 to 25 in-lbs. (in housing)
Coil Core Clamp Screws	20 to 30 in-lbs.
Coil Primary Lead Screw	7 to 9 in-lbs.
Contact Assembly Screws:	
Main, Retard & Uninsulated Tachometer	20 to 25 in-lbs.
Tachometer, Insulated	8 to 10 in-lbs.
Drive Shaft Nut	180 to 300 in-lbs.
Distributor Block Screws	Initial: 4 to 10 in-lbs. Final: 16 to 20 in-lbs.
Switch Terminal Bushing	120 to 156 in-lbs.
Housing Screws	25 to 35 in-lbs.
Plastic Timing Window Plug, Vent Plug	10 to 15 in-lbs.
Metal Orifice	60 to 80 in-lbs.
Harness Outlet Plate Screws	12 to 15 in-lbs.
Switch and Retard Stud Nuts	15 to 17 in-lbs.
Retard Lead Nuts	24 to 26 in-lbs.
Miscellaneous	
Magneto Drive Speed	S6 Magnetos - 1.5 times crankshaft speed S4 Magnetos - equal to crankshaft speed

1. CAUTION: Self locking cam screw is single use. If loosened or removed for any reason, replace with a new self-locking screw.

Section 2. Description and Operation

2-1. General

S-20 and S-200 Series Magnetos are designed to provide ignition for four and six cylinder aircraft engines. These magnetos generate and distribute high voltage for aircraft engine ignition.

To obtain the retard spark necessary for starting, S-20 Series Magnetos employ an impulse coupling, and S-200 Magneto Ignition Systems include an additional contact assembly used in conjunction with a starting vibrator. Figure 2-1 shows the components used in a typical S-200 Ignition System incorporating a starting vibrator. This system consists of a single contact assembly magneto, a dual contact assembly magneto (item 1), an ignition harness (item 2), a combination ignition and starter switch (item 3), and a starting vibrator (item 4).

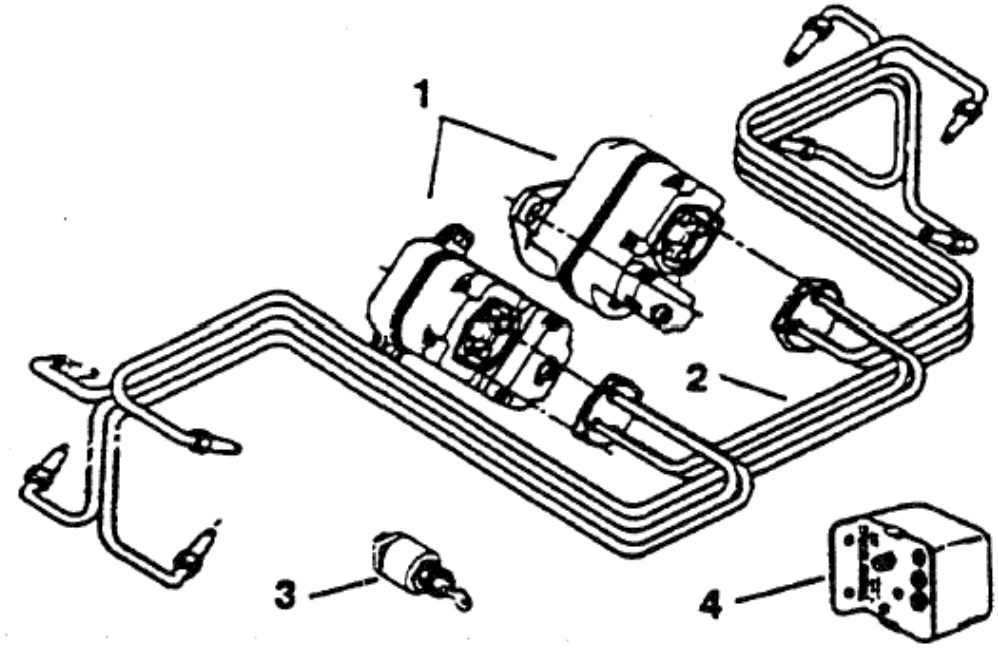

Figure 2-1. S-200 Magneto and Associated Components

1. The “Short Cover” (SC) style magnetos offer the following features:
   - Feed thru capacitor on all magnetos
   - Capacitor interchangeable with S-1200 Series
   - Simplified stud-type switch and retard connections-no special kits necessary
   - Low profile short cover (SC) allows maximum installation flexibility
   - Consolidated parts usage
   - Familiar and versatile S-20 and S-200 technology

SC magnetos are fully interchangeable with older S-20 and S-200 designs. Refer to “Superseded, Discontinued and Interchangeable Magnetos” in Section 11-2.

2. Magneto model numbers are read as follows:

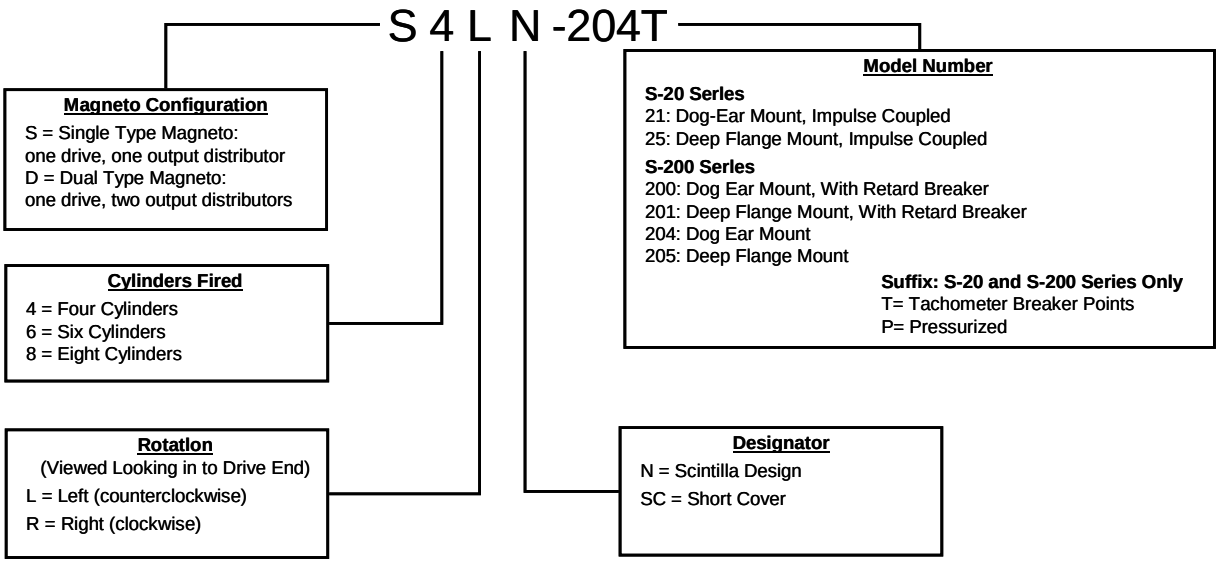

Figure 2-2. Magneto Part Number Elements

2-2. Detailed Description

The magneto is a completely self contained unit. The rotating magnet turns on two ball bearings, one located at the contact assembly end and the other at the drive end. A two lobe cam is secured to the contact assembly end of the rotating magnet shaft. In a six cylinder magneto, the rotating magnet turn 1-1/2 times engine speed. Thus, six sparks are produced through 720 degrees of engine rotation. In a four cylinder magneto, the rotating magnet turns at engine speed. Therefore, four sparks are produced through 720 degrees of engine rotation.

Some S-20 Series four and six cylinder magnetos incorporate impulse couplings. The purpose of the impulse coupling is to: (1) rotate the magnet between impulse trips faster than engine cranking speed, thus generating a better spark for starting the engine, (2) automatically retard the spark during engine cranking, and (3) act as a drive coupling for the magneto.

S-200 Dual Contact Assembly Magnetos (Figure 2-3) incorporate a retard contact assembly. This contact assembly is actuated by the same cam as the main contact assembly. It is positioned so its points open a specific number of degrees after the main contact points open. A battery-operated starting vibrator used with this magneto provides retarded ignition for starting, regardless of engine cranking speed. The retard ignition is in the form of a shower of sparks instead of a single spark, as obtained from an impulse coupling.

All S-200 Series Magnetos and some S-20 Series Magnetos utilize feed-through capacitor technology for suppression of conducted radio interference.

2-3. Maintenance and Overhaul Periods

NOTE: Refer to Figure 1 for an exploded view of the Magneto.

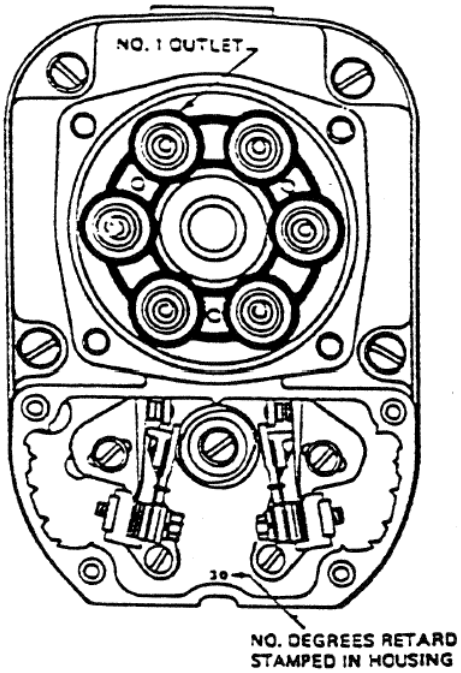

Figure 2-3. Cam End of Dual Contact Assembly Magneto

Any time the magneto-to-engine timing is found to be outside the engine manufacturer's limits, inspect the contact assemblies (Figure 1) (39) according to the instructions in Section 6-2.1.

Inspect magnetos equipped with snap-ring impulse couplings (Figure 1) (8) at the first 500 hours in service and every 500 hours thereafter according to instructions in Section 6-2.3. Inspect magnetos equipped with riveted impulse couplings (Figure 1) (8) at the first 100 hours in service and every 100 hours thereafter according to instructions in Section 6-2.2.

Inspect all magnetos according to instructions in Section 6-2.3 at the first 500 hours in service and every 500 hours thereafter. If the magneto has more than 500 hours, inspection, as outlined above must take place within the next 100 hours, or at the next scheduled inspection period, whichever occurs first, and at 500-hour intervals thereafter. Upon completion of inspection, make an appropriate logbook entry signifying inspection compliance, referencing the serial numbers of the inspected magnetos.

Magnetos are subject to the same environmental conditions and wear as the engine and must be overhauled when the engine is overhauled. Engine overspeed, sudden stoppage or other unusual circumstances may require engine overhaul prior to engine manufacturer's recommendations. In such circumstances the magneto, regardless of “in service time,” must be overhauled with particular attention focused on rotating parts, bearings and electrical components.

In addition, magnetos must be overhauled or replaced five years after the date of manufacture or last overhaul or four years after the date placed in service, which ever occurs first, without regard to accumulated operating hours since new or last overhaul.

2-4. S-20 and S-200 Magneto Operation

2-4.1. General Theory

The rotating magnet is of a two pole design. As the magnet is turned, the polarity continually changes, thereby producing flux reversals in the magneto coil core. The number of flux reversals during one complete revolution of the magnet is two.

With the contact assembly points closed, the flux reversals cause a current to be generated in the primary winding of the magneto coil. The flow of current through this coil produces a magnetic field around the coil. When the contact assembly points open, the magnetic field around the primary winding collapses, causing a high tension voltage to be induced in the secondary winding of the coil. This high tension voltage is conducted to the distributor gear electrode by means of a carbon brush. When the high voltage is applied to the distributor gear traveling electrode, it ionizes the gap to one of the terminals in the distributor block, jumps the gap and is conducted through the contact springs and through a lead to a spark plug.

2-4.2. Operation of S-200 Magneto System with Starting Vibrator

A schematic diagram of a magneto circuit with a starting vibrator is shown in Figure 2-4. The starting vibrator supplies interrupted battery current to the left magneto. This type of vibrator should be used with one of the Continental Motors combination ignition and starter switches which controls the vibrator current flowing to the retard contact assembly and main contact assembly in the left magneto and grounds the right magneto in the START position. In Figure 2-4, all switches are shown in their normal OFF position. Figure 2-4 must only be used for following the electrical operation of the magneto circuit, not for installation purposes.

With the combination ignition and starter switch in its “START” position, the right magneto is grounded. The coil in relay K1 of the starter solenoid is energized; the closed relay contact provides a path for operating voltage to the starter. Battery current flows through vibrator points V1, coil L1 (and L2 in 24 volt models), through the BO (Booster Output) terminals to the switch, where it is split and flows to both the main and retard contact assemblies of the left magneto to ground. The magnetic field built up in coil L1 causes vibrator points V1 to open. Current stops flowing through coil L1, causing the magnetic field to collapse and vibrator points V1 to again close. This allows coil L1 (and L2 where applicable) to energize and vibrator points V1 to again open. This interrupted battery current will be carried to ground through the main and retard contact assemblies so long as they remain closed.

When the engine reaches its normal advance firing position, the main contact assembly of the magneto opens. However, the vibrator current is still carried to ground through the retard contact assembly, which does not open until the starting retard position of the engine is reached. When the retard contact assembly opens (main contact assembly is still open), the vibrator current flows through the terminal at the main contact assembly and then through the primary of transformer T1 (magneto coil) producing a magnetic field around the coil. Each time vibrator points V1 open, the current flow through the primary of transformer T1 ceases. This causes a high voltage to be induced in the secondary which fires the spark plug. A shower of sparks is therefore produced at the spark plug due to the

opening and closing of vibrator points V1 while the main and retard contact assemblies are open.

When the engine fires and begins to pick up speed, the switch is released which deenergizes relay K1 in the starter solenoid. This opens the vibrator circuit and retard contact circuit, rendering them inoperative. The single contact assembly (right) magneto is no longer grounded, therefore, both magnetos are simultaneously firing in full advance.

NOTE: Reference only; for actual schematic, see Airframe Maintenance Manual.

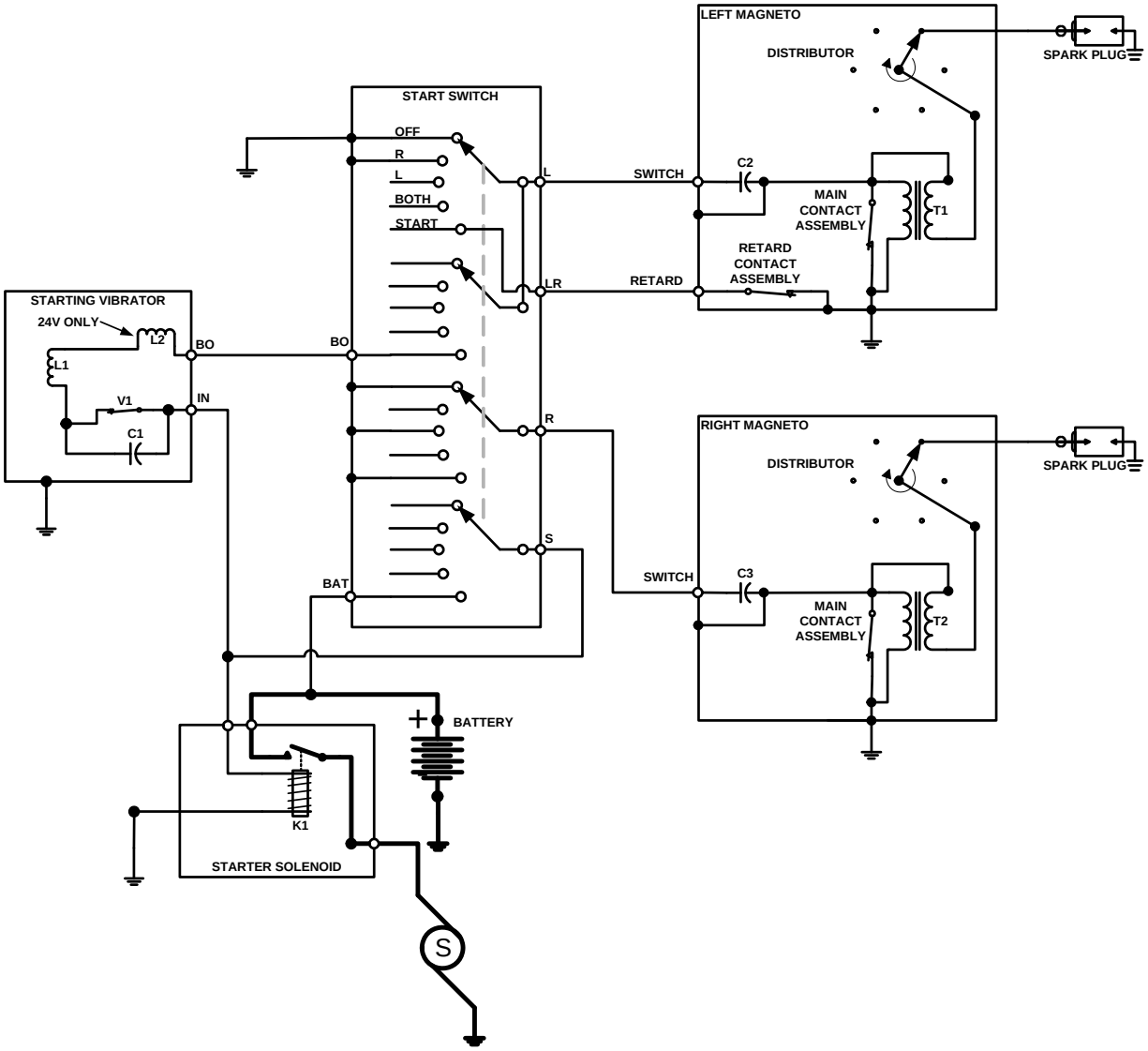

Figure 2-4. Sample Magneto Circuit with Starting Vibrator Schematic

2-5. Serial Numbers

Manufacturing numbers, commonly referred to as serial numbers, are currently used to identify magnetos built by Continental Motors. These manufacturing numbers employ a coding system below. The build date derived from this code, rather than the magnitude of the numbers, determines the date of manufacture. Therefore, for Service Bulletin compliance, all magnetos manufactured, rebuilt or overhauled by Continental Motors may be considered to have a “higher” serial number than magnetos manufactured or “remanufactured” by the Bendix corporation.

Current Manufacturing Numbers may be read as follows:

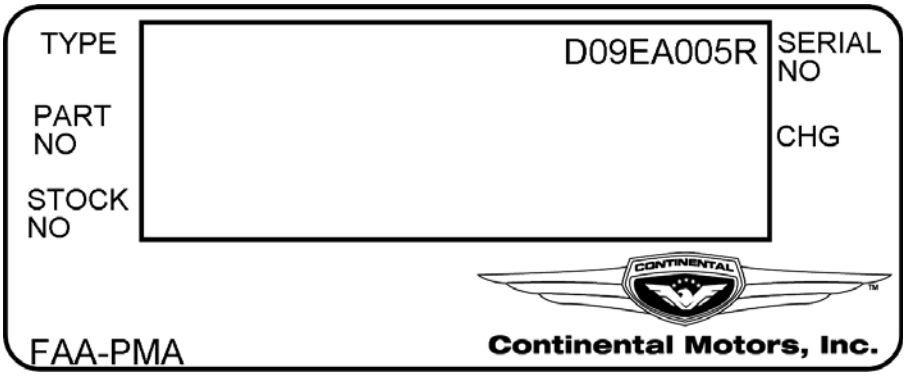

Figure 2-5. Magneto Identification Plate

Example: D09EA005R				
D	**09**	**E**	**A005**	**R**
Component ID D: S-20 E: S-200 F: S-1200 G: D-3000 H: Ignition Switches J: Ignition Vibrators K: Ignition Harness	↓ Year Manufactured 09= 2009	↓ Month Manufactured A: January B: February C: March D: April E: May F: June G: July H: August I: September J: October K: November L: December	↓ Fifth unit produced in month. Begins with A001 at the start of each month. After unit 999, alpha character changes to B, etc.	**Condition** Blank= New R= Rebuilt (No letter for new)

2-6. Storage

Magnetos may be stored up to five years following overhaul in an unsealed plastic bag. Place the packaged magneto in climate controlled, indoor storage between 50-80°F (10-26°C).

Inspect the magneto upon removal from storage for evidence of corrosion. If no exposure is indicated, continue with normal acceptance inspection and installation.

Section 3. Testing & Troubleshooting

3-1. General

NOTE: Index numbers in parentheses refer to the exploded view of the magneto in Figure 1 and the "Illustrated Parts List" in Section 11 unless otherwise specified.

Special Tools Required

A complete listing of special tools required for S-20/S-200 Magneto Maintenance, Inspection and Overhaul is compiled in Chapter 10.

- Magneto Test Stand, Part No. 11-10500

1. If an engine malfunction appears to be attributed to the ignition system, check the spark plugs and wiring first before removing the magnetos.

WARNING

Turn the Ignition Switch OFF, disconnect engine electrical power and confirm continuity between the magneto capacitor and aircraft ground before commencing maintenance or inspections to avoid uncommanded engine starts during maintenance. Do not stand or place equipment within the arc of the propeller.

2. Perform a Magneto Drop Check test according to instructions in the applicable Airplane Flight Manual (AFM)/Pilot's Operating Handbook (POH) to verify proper ignition system operation. RPM drop is expected when one magneto channel in a dual ignition system is turned off. Absence of an RPM drop may indicate:
   - The magneto timing has been advanced beyond the specified setting, or
   - a magneto primary lead is open (Hot Magneto), or
   - an Ignition switch is inoperative, or
   - the grounding circuit of the feed-through capacitor is open, or a combination of these factors.
3. An engine which does not exhibit RPM drop during the Magneto Drop Check is must be shut down and the cause for the problem corrected before further flight. The normal magneto channel drop is specified in the appropriate AFM/POH and the Engine Maintenance and/or Overhaul Manual.
4. As a precautionary measure, test the Magneto grounding circuit prior to shutting down the engine using the following procedure:
   a. With the engine at normal idle, rotate the switch key or lever momentarily to the off position, one magneto is still functioning.
   b. If the grounding circuit is working as prescribed, the engine should quit.
   c. If the Magneto did not ground out, investigate and correct the cause prior to continued engine operation and before the next flight.
   d. Return the switch key or lever to the "BOTH" position and shut down the engine using normal procedures.

5. If problems persist, install a replacement magneto which is known to be in satisfactory condition and send the suspected unit to the overhaul shop for test and repair.
6. Should this not be possible, a visual inspection may disclose the source of trouble. Inspect as follows:
   a. Remove harness securing screws and separate the cover from magneto. Inspect for presence of moisture and foreign matter on rubber grommets and high tension outlet side of the distributor block. Also check for broken or burned outlet towers. If either is present, remove magneto and replace as necessary.
   b. Check the springs in the block towers for proper height. The end of the spring shall not be more than 0.422 inch from top of tower. Replace burned or otherwise short springs must be replaced according to instructions in Section 9-2.3,: Check for broken leads or damaged lead insulation. If either is present, replace magneto.
   c. Inspect contact assemblies as specified in Section 6-2.1.

3-2. Post Overhaul Testing

1. Mount the magneto on a 11-10500 test stand. Connect the high voltage outlet to spark gaps on the test stand using a standard harness assembly. Set spark gaps at 4 mm (0.157 in) as shown in Figure 3-1.

   CAUTION: Do not operate magneto on test stand unless all high voltage leads are connected to spark gaps; an open high voltage circuit would subject magneto parts to damage.

   Do not operate magneto on test stand with oil seal (59) installed for longer than five minutes as hidden damage may result.

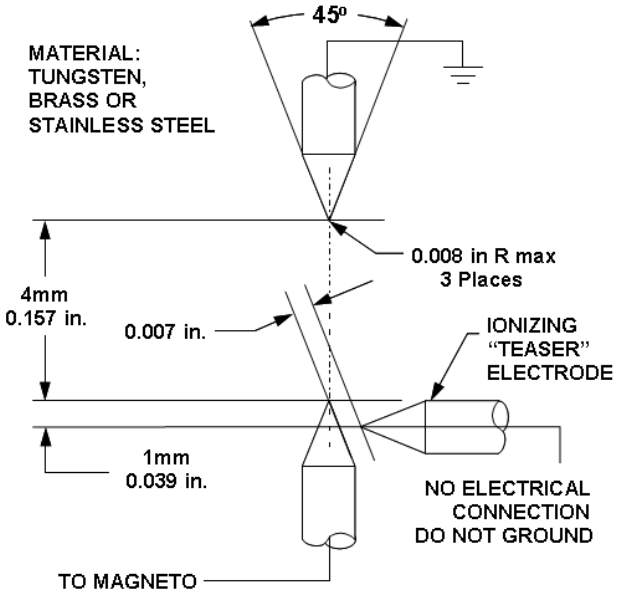

Figure 3-1. Spark Gap Setting

2. Determine the lowest speed at which the rotating magnet can be turned and still spark all gaps without missing (coming-in speed). Magnetos must spark consistently at 150 RPM. If coming-in speed is greater than 150 RPM, the trouble may be due to dirty contact points, a weak coil, a weak magnet, defective capacitor, or improperly timed distributor gear. Clean contact assembly, try a new coil or capacitor, recharge magnet, recheck distributor gear, recheck contact assembly adjustment and repeat the test.
3. Observe electrical and mechanical performance at 150 and 1000 RPM. Perform high speed test run at 3000 RPM minimum. Do not exceed 5100 RPM. Magneto shall fire all gaps consistently and operate smoothly throughout its operating range.
4. Test magnetos equipped with impulse couplings. Couplings must engage fully at speeds up to 150 RPM minimum. Intermittent engagement is permissible up to 450 RPM, at which point the coupling must be fully disengaged. Remove and replace any couplings which do not meet this test.
5. After testing, check rotating magnet for 0.0005 to 0.0015 in. end play and no perceptible radial play. If end play is out of limits, adjust shims and/or replace parts as necessary and re-test.
6. For pressurized magnetos only, test flow rate as follows:
   a. Install a sealed harness cover and gasket onto magneto. Apply 25-35 in. lb. torque to four attaching screws.
   b. Install all applicable ground and retard terminals with sealing insulators.
   c. For magneto P/N 10-500556-901 only, install a B&D Tachometer Sensor P/N 0406-002 or P/N 0406-003. Use pointed tool such as a scribe or a scratch awl to remove the screen and cotton filter from sensor.
   d. Connect the magneto to the Pressurized Magneto Tester as shown in Figure 3-2. Using dry, filtered air at 2.9 to 3.1 psig, flow rate must be within the range 2.4 to 11.8 standard cubic feet per hour (SCFH). If flow rate is below 2.4 SCFH, inspect the orifice for blockage. If flow rate exceeds 11.8 SCFH, determine and correct the source(s) of the leakage. Repeat test following any corrective action.

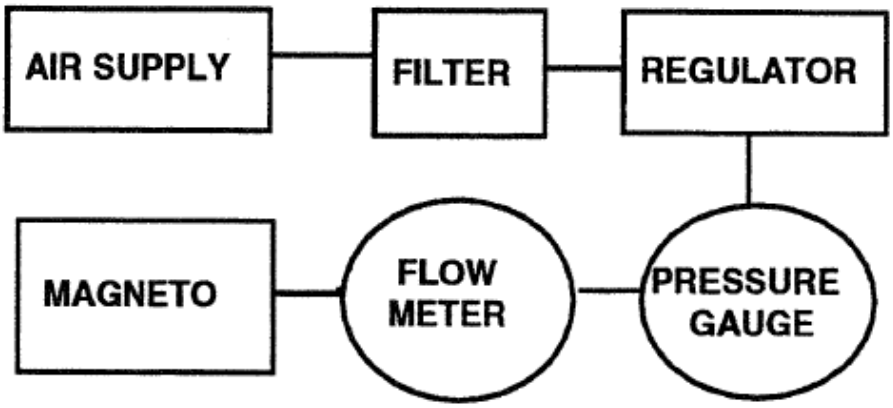

Figure 3-2. Pressurized Magneto Tester

3-3. Hot Magneto Test

1. In addition to performing the magneto-related operational checks specified by the engine and/or airframe manufacturers, prior to each engine shut down, and prior to performing any maintenance on the engine, perform the Magneto RPM drop-off Test as detailed in the Pilot's Operating Handbook (Normally found under Preflight Engine Run-Up Procedures)
2. If no RPM drop is noted when a magneto is individually selected, either the magneto selected is timed far in advance of the other magneto, or the magneto control circuit is primary circuit and airframe ground. Either condition must be remedied before further flight and before moving the propeller by hand.
3. Stop the engine using normal procedures as detailed in the Pilot's Operating Handbook.

3-4. Troubleshooting

CAUTION: If the self-locking (cam-securing) screw (Figure 1)(61) is removed or loosened at any time, always replace with a new self-locking screw and torque 21-25 in-lbs.

Table 3-1. Troubleshooting Chart

Symptom	Probable Cause	Test
Hard Starting	Worn or fouled spark plugs; arcing ignition lead	Inspect and replace or repair as necessary
	Impulse Coupling not operating properly	Remove and check for binding, worn or broken impulse coupling parts
	Impulse Coupling is magnetized	Remove and demagnetize or replace impulse coupling. Inspect engine for magnetized components and demagnetize all such components
	Low voltage at vibrator input	Measure voltage between vibrator terminal marked “IN” and the ground terminal while operating starter. Must be at least 8 volts on 12 volt systems, or 13 volts on 24 volt systems.
	Inoperative vibrator	If voltage is within specification, listen for buzzing of vibrator during starting. If no buzzing is heard, either the vibrator is inoperative or the circuit from the “OUTPUT” terminal on the vibrator to the switch and magneto points is open. Check both “SWITCH” and “RETARD” circuits. Check for good electrical continuity through switch and through magneto points.
	Retard contact assembly in retard (dual contact) magneto not operating electrically. Engine may kick back during cranking due to advanced ignition timing	Retard points may not be closing due to improper adjustment, or may not be electrically connected in the circuit due to a poor connection. Inspect retard points to see if they close. Check for proper contact at the “SWITCH” and “RETARD” terminals of retard (dual contact assembly) magneto and at the vibrator. Check wiring.
	No output from vibrator-magneto combination	Turn engine in direction of normal rotation until retard points just open on No. 1 cylinder position. Remove input connection from starter to prevent engine turning, and while holding the No. 1 plug lead 3/16 inch from ground, energize the vibrator by turning switch to START. Plug lead should throw a 3/16 inch spark. If spark is weak or missing, install new vibrator. If the malfunction persists, remove the magneto and check for improper internal timing or improperly timed distributor gears.
	Magneto improperly timed to engine	Check magneto-to-engine timing according to the Engine Manufacturer's instructions.
	Advance contact assembly out of adjustment (internal timing off).	Inspect contact assemblies according to instructions in Section 6-2.3, step 7. Adjust and replace parts as necessary.
	Retard points opening too late.	Check timing of retard points according to instructions in Section 6-2.3, step 7.

Table 3-1. Troubleshooting Chart

Symptom	Probable Cause	Test
Engine Roughness	Worn or fouled spark plugs	Install new spark plugs.
	Worn ignition leads.	Check plug leads for continuity and breakdown.
	Worn or fouled magneto contact assemblies.	Check magneto contact assemblies for burning or dirt according to instructions in Section 6-2.1,step 1 through step 4.
	Carbon tracked distributor block.	Replace distributor block (79)
Magneto Drop-off Check Out of Limits	Magneto timing incorrect.	Check magneto-to-engine according to instructions in the Engine Manufacturer's instructions.
	Contact assemblies not opening properly.	Inspect contact assemblies for proper opening according to instructions in Section 6-2.3, step 7.
	Main contact assembly out of adjustment (internal timing off).	Check magneto internal timing according to instructions in Section 6-2.3, step 7.
	Faulty plugs or leads.	Check plugs and leads.
	No drop-off noted -- open switch connection.	Check capacitor according to instructions in Section 7-2.5.
	Carbon tracked distributor block.	Replace distributor block (79)

Section 4. Disassembly

4-1. General

NOTE: Index numbers in parentheses refer to the exploded view of the magneto in Figure 1 and the "Illustrated Parts List" in Section 11 unless otherwise specified.

Special Tools Required

A complete listing of special tools required for S-20/S-200 Magneto Maintenance, Inspection, Testing and Overhaul is compiled in Chapter 10.

- CG240 Puller
- 11-6924-1 Pressing Tool
- 11-10192 Remover Tool
- CG40-8 Collet
- CG40-4 Expanding Rod
- No. 2 Retaining Ring Pliers

Complete disassembly of the magneto is not necessary in all instances. Disassemble magneto only to the extent required for maintenance procedures involved.

4-2. Detailed Disassembly Procedures

NOTE: The following parts must be replaced 100% with new parts upon removal from the magneto, regardless of whether disassembly is for the purpose of inspection, parts replacement or overhaul: Lock Washers (3, 13, 34), Screws (12, 41, 47, 56, 61 & 78), Retaining Ring (74), Oil Deflector (55), Oil Seal (59), Bearings (64, 70), Felt Strip (81), Identification Data Plate (52), and Pin (1). If installed, the Spring (10) and Gaskets (14, 49) must also be replaced.

The following parts may be reused after maintenance inspections per Section 6-2.1 and Section 6-2.3, but must be replaced at overhaul: Main and Retard Contact Assemblies (39), Felt Washer (82), and Carbon Brush (73).

4-2.1. Initial Inspection Disassembly

1. Remove the cover retention screws and lock washers (12) from cover (15). Carefully pull cover (15) away from the housing (48). Remove and discard gasket (14), if installed. Pry or unscrew lead terminals of capacitor lead (42) and retard lead (17) (if installed) from terminals of contact assembly(ies) (39).

2. Remove the plug (44, 44a) from the distributor housing (48). Remove the plug (46, 46a) from magneto housing (50). Remove five screws (47). Using care that coil primary lead is released from distributor housing as parts are separated, pull the distributor housing straight away from the magneto housing, leaving the rotating magnet in the magneto housing. Remove and discard the gasket (49), if used.

   CAUTION: Do not allow the two housings to turn in relation to each other as damage to coil or carbon brush may result.

3. Using No. 2 retaining ring pliers, remove the retaining ring (74), securing the gear (72) to the block (79); discard the ring (74). Remove washer (75) and slide the gear (72) from the block (79). Remove washers (76, 77). Using a a scribe or other small pointed tool, remove the felt washer (82) and felt strip (81) from the block (79). Remove the carbon brush (73) from the distributor gear (72).
4. Remove the screws (78) and distributor block (79) from the housing (48).

4-2.2. General Overhaul Disassembly

1. Remove the contact assemblies (39) from magneto by taking out screws (41, 33) and washers (37, 34); discard the contact assemblies.

   NOTE: Tachometer contact assembly, identified by smaller (0.125 in diameter) silver contact points, may be reused.

2. Remove the screws (41) and capacitor (42) from the cover (15) or distributor housing (48). If a retard lead (17) is installed and replacement is necessary, carefully remove it from cover (15). Remove the screws with lock washers (56) and coil core clamps (57); discard the lock washers. Lift the coil (58) from the housing.

   CAUTION: If self-locking cam securing screw (61) is removed or loosened at any time, always replace with a new self-locking screw and torque 21-25 in. - lbs.

3. Using a pair of padded jaw pliers, grip the drive member on drive end of the rotating magnet (54). While holding the rotating magnet, loosen the cam securing screw (61) and remove the screw (61), washer (62), and cam (63).

4-2.3. Drive Plate and Front End Hardware Disassembly

1. Remove the cotter pin (1) from the rotating magnet shaft.
2. While holding the drive member with a pair of padded jaw pliers, remove the nut (2). Lift off the lock washer (3), bushing (5) and washer (4), if used. If a drive plate (6 or 7) is employed, remove using the CG240 puller.
3. Remove the Woodruff key(s) (53), as necessary.

4-2.4. Impulse Coupling Disassembly

WARNING

Using tools, methods, or procedures other than those specified herein for impulse coupling removal may damage magneto components.

NOTE: Use of the specified anti-seize compound during previous assembly will ease disassembly of the impulse coupling.

1. Using heavy gloves or a clean shop towel, grasp the coupling body (9) firmly to prevent the internal spring from unwinding suddenly. Pull outward on the coupling body only enough to release it from cam assembly (11). Keep the coupling body close against the cam and allow the body to turn as the spring (10) unwinds. After one or two turns, spring coils will wedge against projections on the body, restraining the spring from further unwinding.

2. Look into the hole in body and note location of inner eye of the spring (Figure 4-1) where it engages with the mating recess in cam hub. Insert a screwdriver under the spring end and pry the spring eye out of the recess. Remove the body and spring together. Uncoil the spring from the body and pry the spring eye from body recess to disengage the spring; discard the spring (Figure 1)(10).

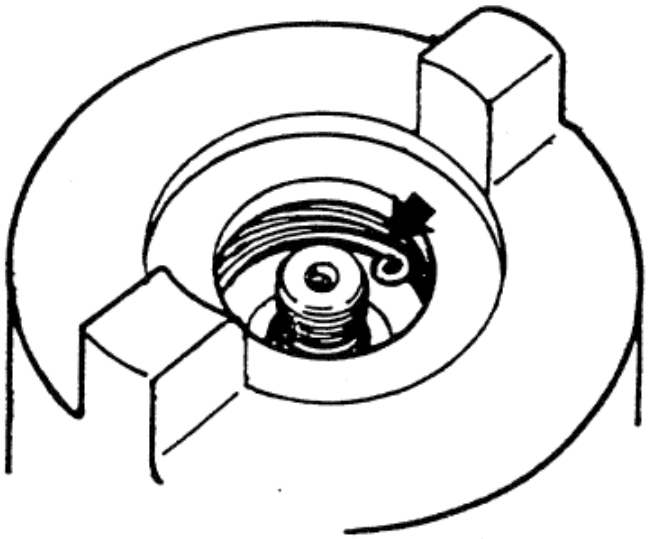

Figure 4-1. Spring Engaged with Cam

CAUTION: Do not allow puller jaws to apply pressure to the flyweights; resulting damage will require flyweight replacement.

3. Install the nut (2) on the end of the rotating magnet (Figure 1)(54) shaft to protect the cotter pin holes. Engage the puller over the shaft and align the jaws of the puller under the cam assembly as shown in Figure 4-2.

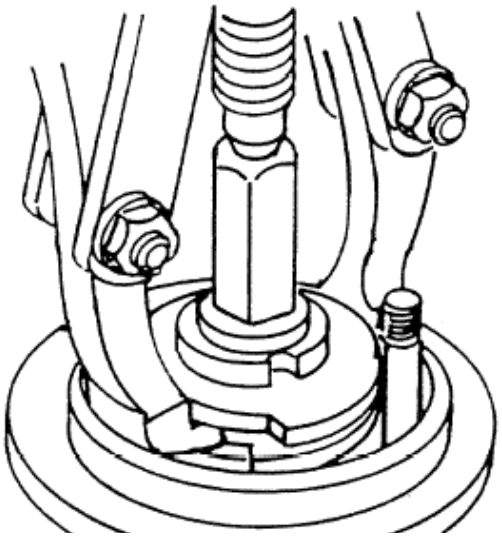

Figure 4-2. Impulse Coupling Cam Removal

4. Tighten the puller handle to remove the coupling from the shaft. If the cam assembly (11) does not release with maximum hand torque applied to the puller handle, apply

penetrating thread release compound between the cam assembly (Figure 1)(11) and the shaft. While the puller is still fully tightened, hold the tip of hot heavy-duty soldering iron in contact with the cam assembly hub (Figure 4-3). Solder wetting of the tip at the point of contact with the cam hub will assist in heat transfer to the parts. Retighten puller after about a minute of heat application.

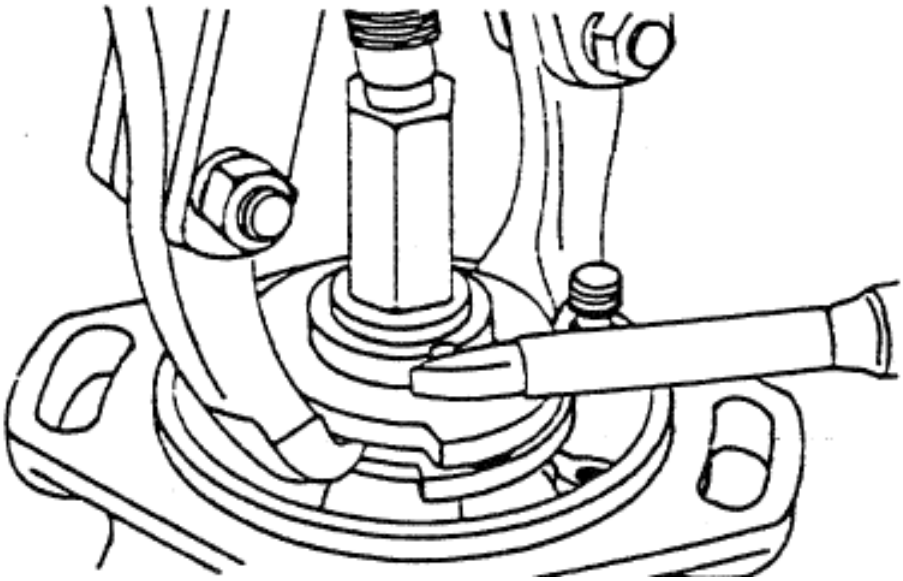

Figure 4-3. Apply Heat to Release Coupling

CAUTION: Do not strike the puller with a hammer. If the puller is struck with a hammer, magneto ball bearings must be replaced.

Do not tighten the puller handle further after the impulse coupling cam releases from shaft. This could damage a flyweight if the flyweight is caught under the woodruff key.

5. Remove the puller. Holding the toe (See Figure 6-3 for flyweight terminology) of the flyweight inward, lift the cam from the shaft.
6. Remove woodruff key(s) (Figure 1)(53) from the rotating magnet shaft; discard the woodruff key(s).

4-2.5. Rotating Magnet (Rotor) Disassembly

1. Install the nut (2) on the end of the rotating magnet (54) shaft to support cotter pin holes. With the Woodruff keys(s) (53) removed from drive end, press the magnet (54) from the housing (50) using an arbor press. The Oil Deflector (55) will come off during this operation.
2. Remove and discard the bearing (70) cage assembly.

CAUTION: To prevent damage to the end of the rotor (54) place a piece of copper or brass (approximately ¼ inch thick) between the end of the shaft and the arbor press ram when removing the bearing (70) inner race and sleeve bearing (69).

3. Clamp the knife edge of the 11-10192 removal tool between the inner race of the front bearing (70) and the wide portion of the rotor (54). Thread the nut (2) onto the rotor (54) to support and cover the cotter pin holes. Remove the bearing (70) inner race and sleeve bearing (69) by pressing on the rotor (54) with arbor press. Discard the bearing (70) inner race. Remove the shim washers (71). Keep washers together and identify as drive end for reassembly.

4. Disassemble the pinion gear (67) and bearing (64) inner race:

   a. Fabricate two support bars similar to the ones shown in Figure 10-1.

   b. Remove and discard the bearing (Figure 1) (64) cage assembly.

   c. Position the fabricated bars between the magnet assembly casting and the pinion gear (67).

   d. Position the bars and magnet assembly in one of the slots in the web or base of an arbor press. The slot must be large enough to allow the casting magnet to pass through, but small enough to hold the fabricated bars.

   CAUTION: To prevent damage to the end of rotor (54), place a piece of copper or brass (approximately ¼ inch thick) between the end of the shaft and the arbor press ram when removing the gear (67) and bearing (64) race.

   e. Using an arbor press, remove the gear (67) and bearing (64) race.

   f. Remove the shim washers (65) and plain washer (66) from the shaft. Keep the washers together and identify as the cam end for use in reassembly.

4-2.6. Housing Disassembly

1. Support the magneto housing, mounting flange down, on the base plate of an arbor press using a block of wood to protect the impulse coupling stop pins (60). Insert the 11-6924-1 Pressing Tool through the bearing outer race until it seats against the oil seal (Figure 4-4) (59) as shown. Press the oil seal out of the housing and discard.

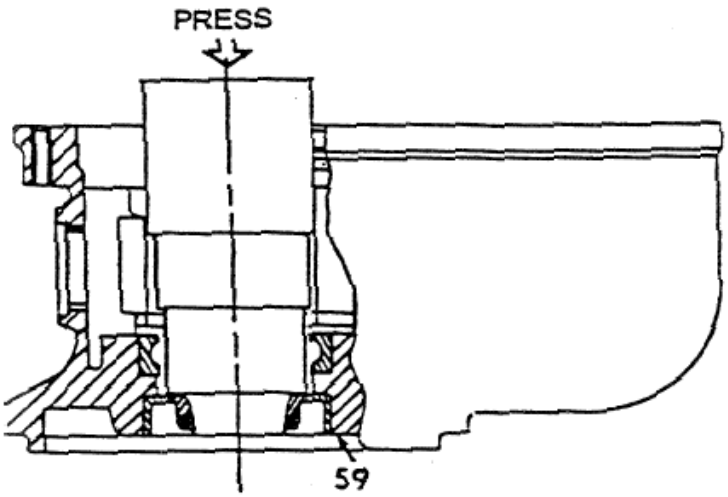

Figure 4-4. Oil Seal Removal

2. Place magneto housing (50) mounting flange up on arbor press base plate. Insert the 11-6924-1 Pressing Tool through the bearing outer race (Figure 4-5) (70) until it bottoms as shown. Remove and discard the outer race.

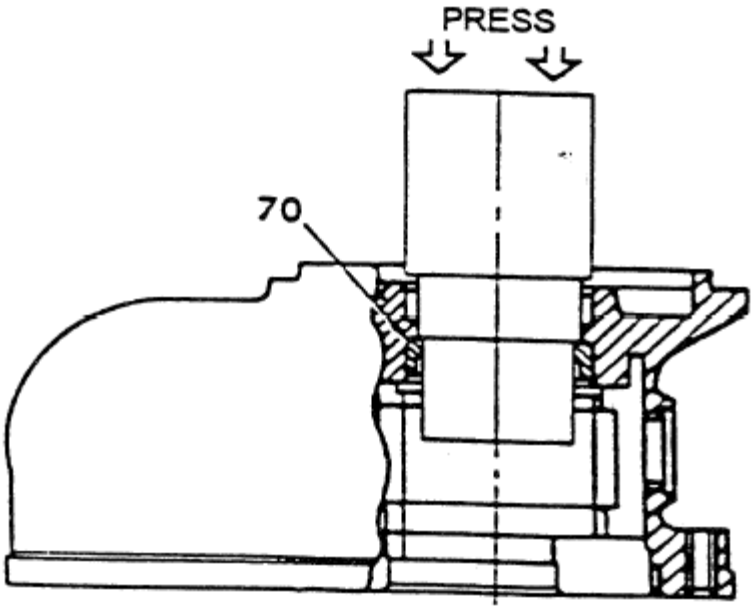

Figure 4-5. Bearing Outer Race Removal

3. Record the magneto type, part number and serial number. Remove and discard the nameplate (Figure 1) (52). Clean pad area to remove adhesive and dirt.
4. Using CG40-8 Collet, CG40-4 Expanding Rod and arbor press, remove the bearing (64) outer race from the distributor housing (48).

Section 5. Cleaning

5-1. General

NOTE: Index numbers in parentheses refer to the exploded view of the magneto in Figure 1 and the "Illustrated Parts List" in Section 11 unless otherwise specified.

Using a clean, dry, lint-free cloth, wipe accessible areas of the housing (48, 50) and other external surfaces free of grease, oil film or other contaminants.

5-2. Detailed Magneto Cleaning Procedures

1. Clean contact points (39) using any hard finished paper (i.e., a typical business card), close contacts on cleaning paper, then open breakers and remove paper. Do not drag paper through closed contacts. Do not use emery cloth.
2. All other parts of magneto except the capacitor (42), retard lead (17), distributor block (79), cam (63), and coil (36) may be washed in a standard cleaning solvent and dried with compressed air. Blow out holes in ventilator plug (46) with compressed air.

   CAUTION: Do not immerse the cam (62) or distributor block (79) in solvent; solvents will damage these items.

3. Clean the capacitor (42), retard lead (17), cam (63), coil (58), and contact compartment by wiping with a clean dry cloth.

   WARNING

   Isopropyl Alcohol (IPA) is Flammable - Do not use near an ignition source. Use only with adequate ventilation. Use appropriate personal protective equipment to protect eyes, skin and clothing from exposure. Avoid breathing IPA vapors. Store IPA only in approved containers.

   CAUTION: When utilizing compressed air, wear OSHA approved protective eye wear. Never exceed 30 psi when using compressed gases for cleaning purposes. (OSHA 1910.242(b)).

4. Clean the distributor block (79) with a clean dry lint free cloth, carefully wipe the internal and external surfaces of the distributor block clean and free of all contaminants. If the dry, lint free cloth is insufficient, moisten the cloth with isopropyl alcohol and wipe the accessible surfaces of the distributor block free of contaminants. Do not allow alcohol to contact the bronze bushing.
5. Install 10-70506-10S protective caps to cover both ends of the distributor block bronze bushing. This masking will prevent contamination of the bearing during the second stage of the cleaning operation.
6. Treat distributor blocks according to Section 7-2.4.
7. Hold the distributor block with the outlet towers in a vertical plane. Using a 1/2 inch bristle brush dipped in isopropyl alcohol, clean in and around the distributor block

outlet towers and the distributor block electrodes, allowing the cleaning fluid to flush out any remaining contaminants from the inside of the block.

CAUTION: When utilizing compressed air, wear OSHA approved protective eye wear. Never exceed 30 psi when using compressed gases for cleaning purposes. (OSHA 1910.242(b))

8. Use dry, oil free compressed air to blow the block dry and remove the protective caps from the bronze bushing.

Section 6. Periodic Maintenance

6-1. General

NOTE: Index numbers in parentheses refer to the exploded view of the magneto in Figure 1 and the “Illustrated Parts List” in Section 11 unless otherwise specified.

Special Tools Required

- 10-400550-1 Magneto Grease
- 10-86527 High Temperature Lubricant
- 11-8465 Rotor Holding Tool
- 11-8150-1 Timing Kit
- E-50 Timing Light (or equivalent)

1. Use a 4 to 5 power magnifying glass for all visual inspections.

   NOTE: The following parts must be replaced 100% with new parts upon removal from the magneto, regardless of whether disassembly is for the purpose of inspection, parts replacement or overhaul: Lock Washers (3, 13, 34), Screws (12, 41, 47, 56, 61 & 78), Retaining Ring (74), Oil Deflector (55), Oil Seal (59), Bearings (64, 70), Felt Strip (81), Identification Data Plate (52), and Pin (1). If installed, the Spring (10) and Gaskets (14, 49) must also be replaced.

   The following parts may be reused after maintenance inspections per Section 6-2.1 and Section 6-2.3, but must be replaced at overhaul: Main and Retard Contact Assemblies (39), Felt Washer (82), and Carbon Brush (73).

2. Periodic Maintenance Intervals

   a. Perform a visual inspection of surrounding components whenever engine maintenance requires access to the magneto internal components.

   a. Perform the inspection detailed in Section 6-2.1 any time magneto-to-engine timing is found to be outside the engine manufacturer's limits.

   b. Perform the inspection detailed in Section 6-2.2 at the first 500 hours in service and every 500 hours thereafter for magnetos with impulse couplings (Figure 1)(8) installed or at the first 100 hours in service and every 100 hours thereafter for magnetos with riveted impulse couplings installed.

   c. Perform the inspection detailed in Section 6-2.3 for all magnetos at the first 500 hours in service and every 500 hours thereafter.

   d. Make appropriate log book entries signifying compliance with Section 6-2.1, Section 6-2.2 or Section 6-2.3, referencing the magneto serial numbers on which the inspections were conducted on.

6-2. Detailed Maintenance Procedures

6-2.1. Contact Assemblies

Inspect contact assemblies:

1. Remove the cover (15) from the housing (48) according to instructions in Section 4-2.1.
2. Examine the magneto coil, capacitor and contact point leads for condition and security. Inspect insulation for chafing or discoloration. Discoloration could indicate thermal breakdown. If insulation is nicked, chafed or cut, replace the affected component.
3. Turn the magneto drive shaft until the cam follower of the main contacts rests on the high lobe of the cam, holding the points in their open position. Using a fiber or plastic rod with a screwdriver-shaped end, prod the contact points as illustrated in Figure 6-1. If looseness is noted, replace the contact assembly. Repeat the procedure for retard and tachometer point contacts, if installed.

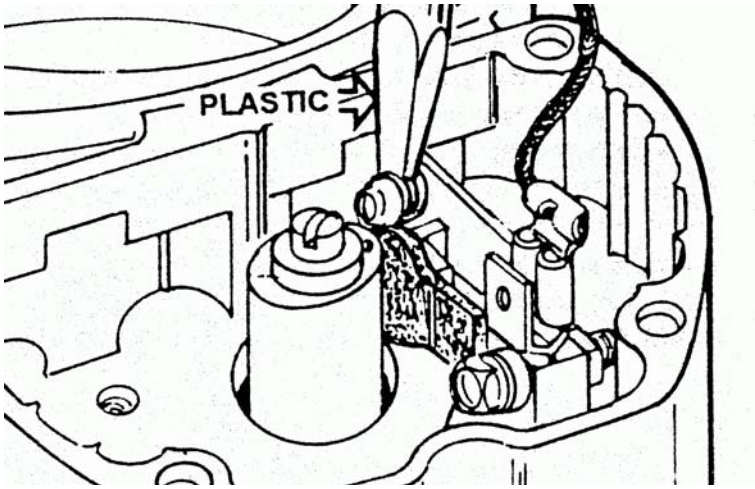

Figure 6-1. Check Contact Point Security

NOTE: Do not attempt to burnish, stone or dress contact points. Do not clean contact points with emery cloth. If the contact assembly points appear to be unserviceable, replace the entire contact assembly.

4. Examine contact points for wear or burning. Discard and replace contact assemblies (Figure 1) (39) with points that are deeply pitted or burned. Figure 6-2 shows how a typical contact point will look when the surfaces are separated for inspection. Desired contact surfaces have a dull gray, sandblasted (almost rough) or frosted appearance, over the area where electrical contact is made, indicating the points are wearing evenly and mating properly. Replace burned, pitted, peaked or otherwise damaged contact assemblies.

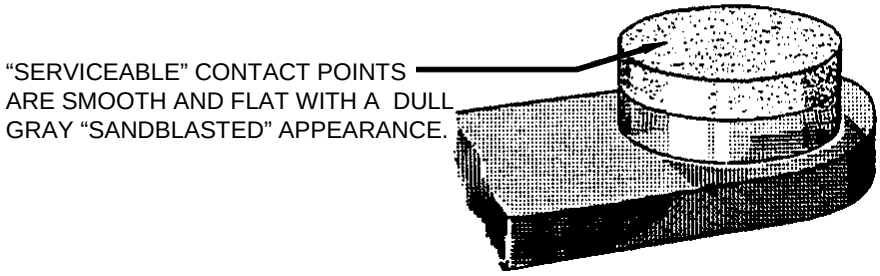

Figure 6-2. Normal Contact Point

5. Check the condition of cam follower felt. Squeeze the felt tightly between the thumb and forefinger. If no oil residue is left on the fingers, lubricate the felt with 2-3 drops of 10-86527 Lubricant. Allow approximately 30 minutes for the felt to absorb the oil. Blot excess oil from the felt with a clean cloth. Too much oil may foul contact points and cause excessive burning.
6. Clean dirty breaker points according to instructions in step 1 of Section 5-2.
7. Check magneto-to-engine timing as follows:
   a. If necessary, ensure magneto impulse coupling flyweights are not engaged on the stop pins. Connect the E-50 Timing Light, or equivalent across the main contact assembly.
   b. Slowly bring engine up to number one cylinder advance firing position according to the engine manufacturer's instructions. At this instant timing light should go out, indicating the magneto is properly timed to the engine. If the timing light remains illuminated, remove magneto from engine and perform internal timing check and inspection according to instructions in Section 6-2.3, step 7.

6-2.2. Impulse Couplings

For all S-21, S-23 and S-25 series magnetos, inspect snap ring impulse couplings (Figure 1) (8) at the first 500 hours in service and every 500 hours thereafter, or inspect riveted impulse couplings (8) at the first 100 hours in service and every 100 hours thereafter. Snap ring cam assemblies may be distinguished by the “S” mark on both sides of the toe of each flyweight as shown in Figure 6-3.

1. Check flyweight and axle for wear:

WARNING

A polished area on the heel of the flyweight (Figure 6-4) is an indication of severe wear and cause for immediate rejection of the cam assembly.

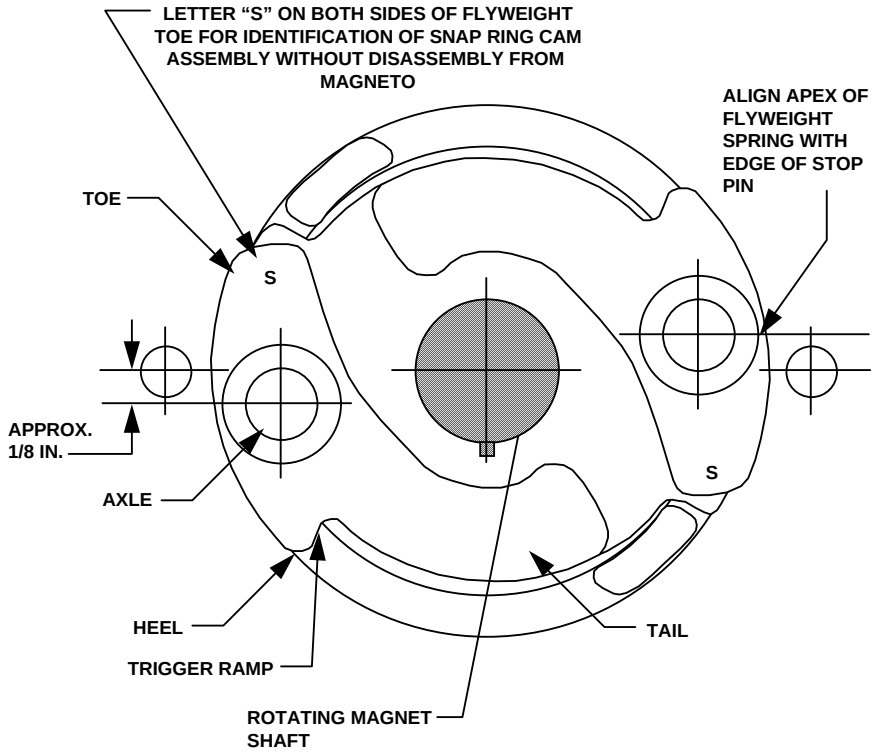

Figure 6-3. Flyweight Terminology

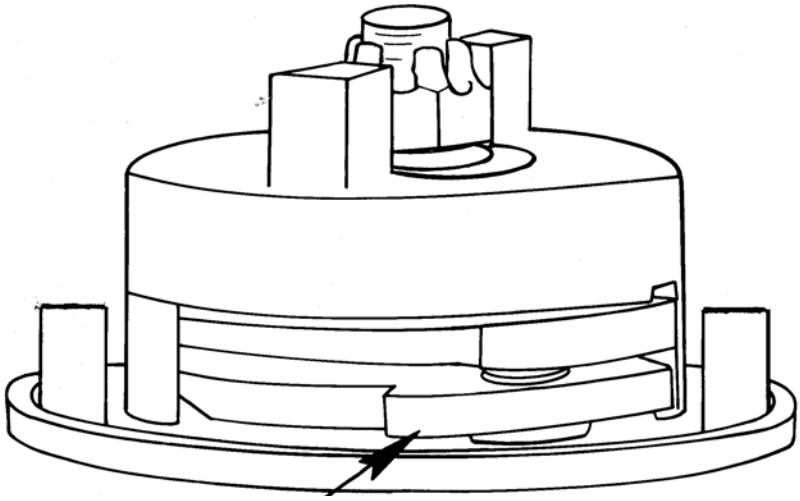

Figure 6-4. Heel Inspection

WARNING

Lock the rotor on drive-shaft end only. Do not use gear locking devices. Clamping the gear may result in gear tooth damage and subsequent magneto failure.

a. Rotate the impulse coupling so the flyweight axles are next to the stop pins. Position flyweight as shown in Figure 6-3. Lock rotor in place using an 11-8465 rotor holding tool.

NOTE: Dimensions in Figure 6-5 are approximate.

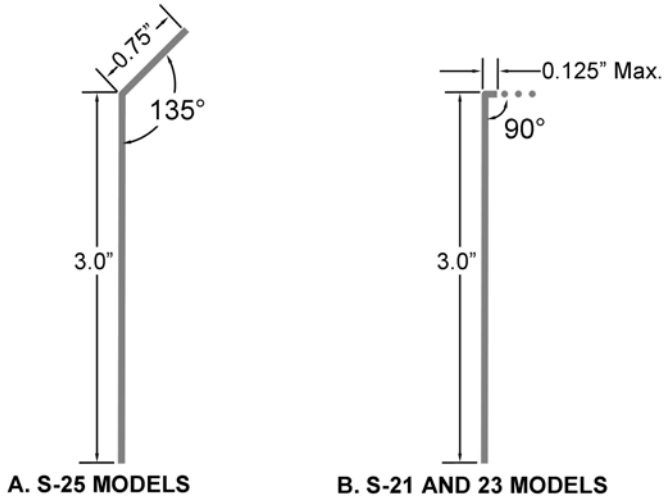

Figure 6-5. Wire Hook Configuration

b. For Model S-25 magnetos, push on the flyweight trigger ramp (See Figure 6-6A) using bent wire as shown in Figure 6-5A. Proceed to step (d).

c. For Model S-21 and S-23 magnetos, form wire into hook as shown in Figure 6-5B. Reach between the cam and the flyweight with the wire hook as near as possible to the stop pin. Pull outward on the flyweight as shown in Figure 6-6B.

d. Insert a feeler gauge between the stop pin and flyweight to determine clearance ("X" of Figure 6-6) while the flyweight is forced outward. Maintain constant outward force on the flyweight while measuring clearance to ensure accuracy.

e. Remove the wire to relax the flyweight. Add a 0.014" feeler gauge blade to the "X" value measured in step d (Figure 6-7). Attempt to pass the "X" value plus "0.014" feeler gauges between the flyweight and stop pin. If feeler gauges pass, remove and discard worn cam assembly.

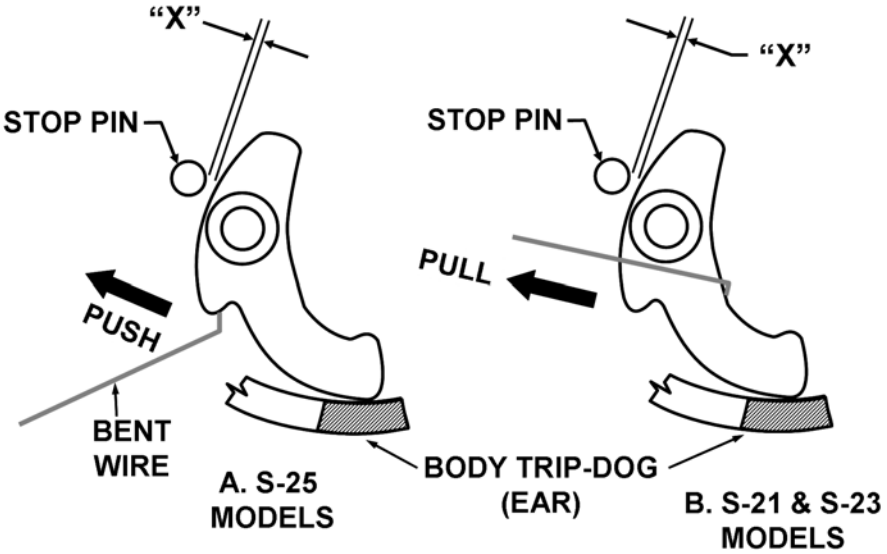

Figure 6-6. Flyweight to Axle Wear Check

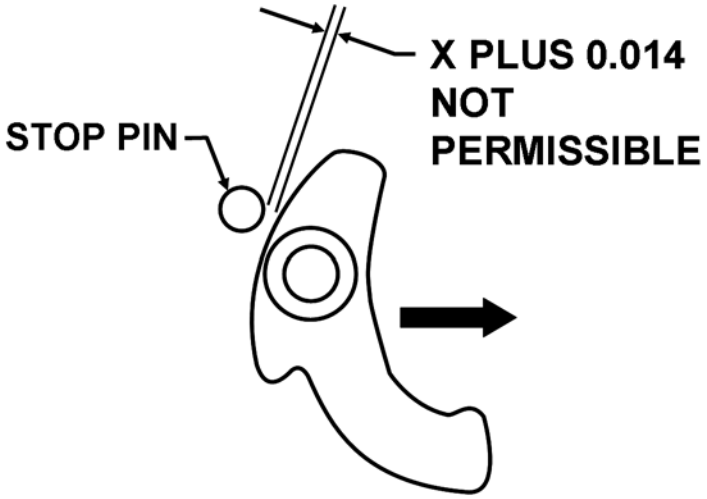

Figure 6-7. X Value Measurement

2. If the impulse coupling is found to be unacceptable as a result of any of the preceding checks described, replace the worn or faulty components or the entire impulse coupling assembly.

3. Examine the stop pins in the magneto flange or housing when inspecting the impulse coupling assembly. A shiny spot at the flyweight contact point is acceptable, a step

catch at this point is unacceptable. A damaged or worn stop pin is cause for replacement of the magneto stop pin, or flange, depending on extent of damage or wear.

6-2.3. 500 Hour Inspection

1. Disassemble the magneto according to instructions in Section 4-2.1.
2. Inspect and treat the distributor block (21) according to instructions in Section 7-2.4.
3. Inspect the distributor gear assembly (25) and carbon brush (26):
   a. Wipe the distributor gear and axle (25) free of all oil film and other contaminants. Inspect for damage or unusual wear according to instruction in Section 7-2.2; replace as necessary.
   b. Remove the carbon brush and spring (26) from the hole in the gear axle (25). Clean the hole with a pipe cleaner. Check carbon brush for side loading or unusual wear. Measure carbon brush from spring shoulder to working end of brush. Overall length shall be 0.375 in. minimum. Replace worn brushes, as necessary, with new brush and spring assembly (26). Seat new brush and spring (26) in gear (25) axle hole and compress brush to within 1/8 in. of gear, then release slowly. Brush shall move freely within the hole in the axle.
   c. Generously apply MS-122AD teflon dry lubricant spray to the distributor gear teeth.
   d. Ensure washers (76, 77) are in place on the gear axle and in good condition. Ensure the nylon washer (77) is positioned against distributor gear.
4. Inspect the housings (48, 50) for damage. Clean housings (48, 50) with a clean, dry, lint-free cloth.
5. Inspect the coil (58):
   a. Using a dry, lint free cloth, clean contaminants from accessible surfaces of coil.
   b. Ensure the coil outlet tab is parallel with the housing to cover mating surface. Bend the tab with a finger, as necessary, to align the tab.
   c. If the carbon brush (73) has caused wear in the coil outlet tab, indicated by a visible depression in the tab, disassemble the coil (58) from housing (55) according to instructions in Section 4-2.2, and repair the coil (58) according to instructions in Section 8-2.1. Install the coil (58) in the housing (50) according to instructions in Section 9-2.1.
6. Install the distributor block (79) and distributor gear (72) assembly in the magneto housing (48) according to instructions in Section 9-2.4. Assemble housing halves (48, 50) together according to instructions in Section 9-2.3. If used, install a gasket (49) between the housing halves. Pay particular attention to proper distributor gear positioning.
7. Inspect contact assemblies (39) and related components:

a. The contact assembly area shall be free of moisture, dirt, oil or grease residue. Clean as necessary.

b. Inspect the assembly according to instructions in Section 6-2.1, step 1 through step 6.

CAUTION: If the self-locking (cam-securing) screw (61) is removed or loosened at any time, always replace with a new self-locking screw and torque 21-25 in-lbs.

c. Ensure cam securing screw (61) is tightened to a torque value of 21-25 in.-lb.

d. Check magneto internal timing:

(1). Loosen the nut securing drive member of magnet shaft sufficiently in order to install the 11-8465 Rotor Holding Tool under nut and flat washer as shown in Figure 9-20. Tighten the nut securely.

WARNING

Rotor is to be locked on drive-shaft end only. Do not use gear lock devices. Use of such devices may result in gear tooth damage and subsequent magneto failure.

NOTE: Tighten the 11-8465 Rotor Holding Tool adjusting knob only enough to hold magnet shaft firmly in desired position. Over-tightening the adjusting knob may damage the drive end bearing.

(2). Remove the timing inspection plug (44) from the top of the magneto. Turn the rotating magnet in normal direction of rotation until the applicable timing mark on the distributor gear is aligned with the center of the timing window. Turn the magnet backward until the magnet finds its neutral position. Tighten the 11-8465 Holding Tool adjusting knob until the pressure applied to the housing flange prevents the rotor (54) from turning freely. With magnet held in the neutral position, install the 11-8150-1 Timing Kit timing plate and pointer assemblies (Figure 9-21) in the magneto contact compartment. Align the pointer assembly with the “0°” mark on the timing plate.

(3). Loosen the 11-8465 Holding Tool adjusting knob and turn the rotating magnet in normal direction of rotation until the pointer indexes with respective 10º mark. Using the E-50 Timing Light or equivalent, check that main contact points just open at (10º ± 4º) “E” gap position.

(4). Turn the rotating magnet until the contact assembly cam follower is on the high point of the cam lobe. Tighten the 11-8465 Holding Tool adjusting knob and measure the contact point gap for 0.018 ± 0.006 inch clearance. If dimension does not fall within limits, readjust contact points to 0.018 ± 0.006 in. and verify the points open within (10º ± 4º) “E” gap tolerance. If points do not open within tolerance, replace contact assembly.

(5). On dual contact assembly magnetos, the retard contact assembly is adjusted to open a predetermined number of degrees after the main contact assembly opens. The degree of retard for any particular magneto is stamped in the

bottom of the contact compartment (Figure 2-3). Add degrees retard to the number of degrees past neutral where the main contacts just open. Unlock the holding tool and turn the rotating magnet in the normal direction of rotation until pointer of timing kit indexes this total. Lock the holding tool in this position. Using a timing light, adjust retard contact assembly to just open. Tolerance of retard is +2/-0º. Unlock the holding tool. Turn the rotating magnet until the cam follower is on the high point of the cam lobe. Measure retard contact clearance: 0.018 ± 0.006 in. If dimension is not within limits, readjust retard contact assembly and verify the points will open within retard degree tolerance. Replace the contact assembly if retard degree tolerance and contact clearance cannot be met.

(6). If used, adjust tachometer contacts to maximum opening of 0.019 ± 0.003 in. when on the highest point of the cam lobe.

CAUTION: When utilizing compressed air, wear OSHA approved protective eye wear. Never exceed 30 psi when using compressed gases for cleaning purposes. (OSHA 1910.242(b)).

(7). Inspect the magneto cover (15) for damage. Check capacitor (42) for case or flange looseness, and for evidence of lead chafing. Using clean, dry compressed air, clean as necessary and replace faulty or unserviceable components. See appropriate procedures in Section 9-2, if capacitor replacement is necessary.

8. Form the capacitor and coil leads and install the magneto cover (15), with a new gasket (14) if required, on the distributor housing (48) according to instructions in Section 9-2.
9. Install the magneto on the engine and adjust the “Magneto-to-Engine” timing according to the engine manufacturer's instructions.
10. Replace any missing terminal eyelets on the harness wires before reinstalling the ignition harness on the magneto. Check the harness grommets for signs of carbon tracking; replace harness components according to instructions in the High Tension Ignition Harness Service Manual, X43001.
11. Reinstall the ignition harness adapter plate to the magneto. Tighten the four screws evenly and torque 12-15 in-lbs.
12. Complete installation by properly attaching the aircraft primary wiring and any other miscellaneous hardware items removed.

Intentionally Left Blank

Section 7. General Overhaul

7-1. General

NOTE: Index numbers in parentheses refer to the exploded view of the magneto in Figure 1 and the "Illustrated Parts List" in Section 11 unless otherwise specified.

Special Tools Required

- 10-70506-10S Protective Caps
- 10-391200 Distributor Block Lubricant
- 10-391400 Distributor Block Coating
- 11-8465 Rotor Holding Tool
- 11-8150-1 Timing Kit
- E-5 High Voltage Cable Tester
- E-50 Timing Light (or equivalent)
- Fluke 8840A Digital Multimeter
- LC103 Capacitor Tester

1. Use a 4 to 5 power magnifying glass for all visual inspections.

   NOTE: The following parts must be replaced 100% with new parts upon removal from the magneto, regardless of whether disassembly is for the purpose of inspection, parts replacement or overhaul: Main and Retard Contact Assemblies (39), Lock Washers (3, 13, 34), Screws (12, 41, 47, 56, 61 & 78), Retaining Ring (74), Oil Deflector (55), Oil Seal (59), Bearings (64, 70), Felt Strip (81), Identification Data Plate (52), Carbon Brush (73) and Pin (1). If installed, the Spring (10) and Gaskets (14, 49) must also be replaced.

2. "General Overhaul," as specified in Section 7-2, must be performed at the same interval as engine overhaul, or in the event of severe environmental effects (engine overspeeds, sudden stoppage or other unusual circumstances), or at the expiration of four years without regard to accumulated engine operating hours since new or last overhaul.

7-2. Detailed Overhaul Procedures

7-2.1. Magneto Disassembly

Disassemble the magneto completely according to instructions in Section 4, "Disassembly."

7-2.2. Distributor Gear Inspection

CAUTION: Use only the latest configuration distributor gear available at the time of overhaul.

1. Determine if the distributor gear matches the current production (Figure 7-2) design. Very old gears are dark brown laminated phenolic. Old nylon gears (Figure 7-1) incorporate a captive washer. If the distributor gear does not match the current production design, discard the superseded gear and replace with the current production design.

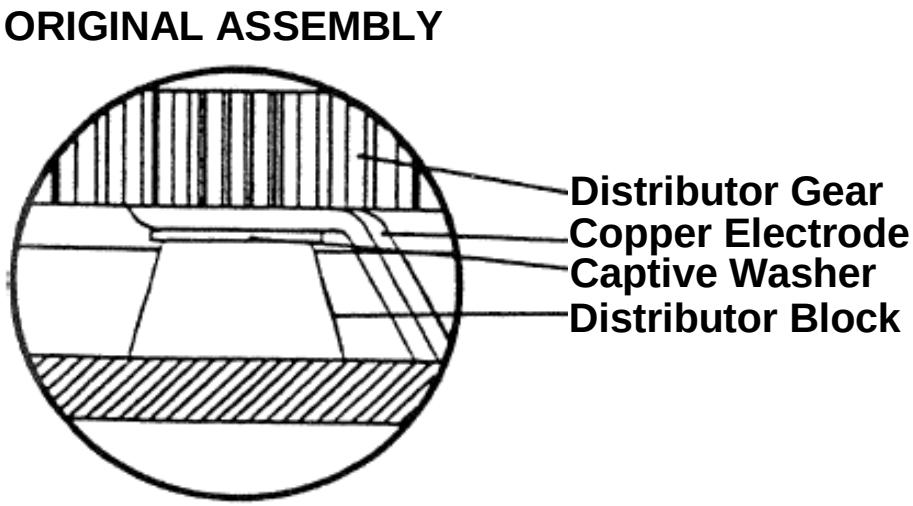

Figure 7-1. Old Gear Assembly

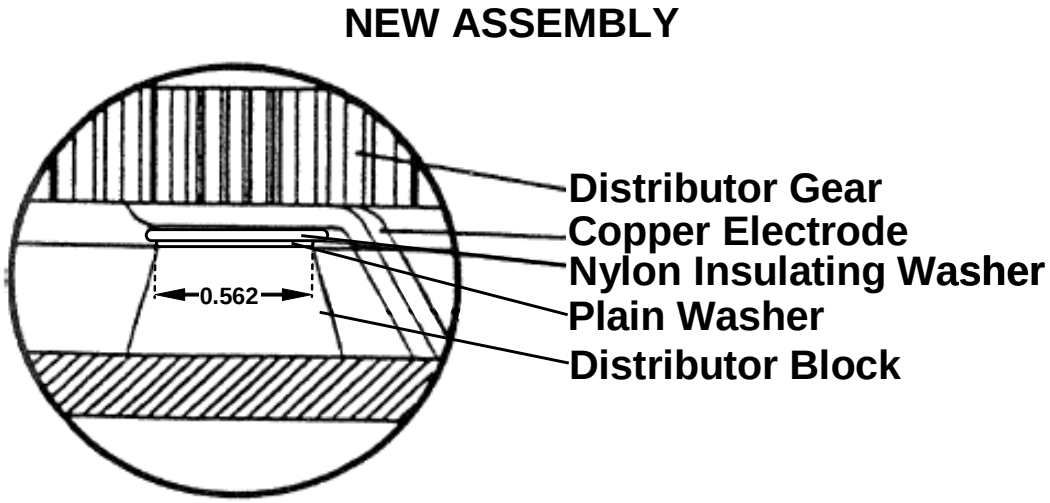

Figure 7-2. Production Gear Assembly

2. If the distributor gear (72) matches the current production design, inspect the gear:
   a. Inspect the gear for discoloration. If the surface of the gear is chalky or crazed, discard and replace the gear. If the color of the gear has turned brown or the gear teeth are turning brown, the gear has been exposed to extreme heat, discard and replace the gear.
   b. Inspect the gear for missing or damaged missing or damaged teeth. If portions of the gear teeth are broken or missing, discard and replace the gear.
   c. If the axle or electrode exhibit wear or damage, or there is evidence of looseness between the axle and gear or the strap and gear, discard and replace the gear assembly. If the electrode surface is slightly carbonized, smooth off with a nylon scouring pad.
3. Wipe the gear (72) free of all oil film and other contaminants.
4. Check the gear (72) electrode for wear with vernier calipers or a micrometer at the points indicated in Figure 7-3. The electrode must measure 0.933 + 0.000/-0.023 in. If the electrode is worn beyond specifications, discard and replace the gear (72).

Procedure continues following Figure 7-3...

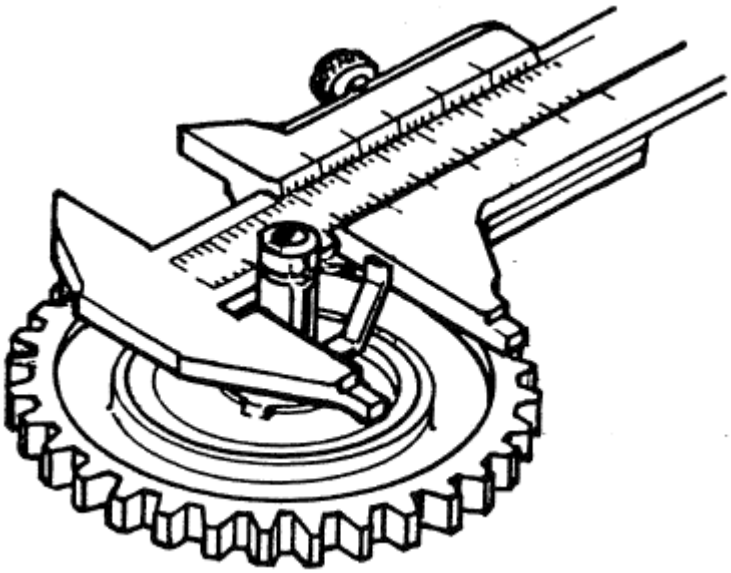

Figure 7-3. Check Distributor Gear Electrode Wear

5. Using Red Dykem or red lacquer, paint timing marks on the gears:

   a. For S4LN magnetos, paint tooth and indent marks indicated by (Figure 7-4A) CCW arrows. For S4RN magnetos, paint tooth and indent marks indicated by (Figure 7-4A) CW arrows.

   b. For S6LN-200 and -201 magnetos, paint tooth and indent mark indicated by the "outer" CCW BOOSTER (Figure 7-4B) arrows. For S6RN-200 and -201 magnetos, use the "outer" CW BOOSTER (Figure 7-4B) arrows. These magnetos are used in conjunction with a starting vibrator (or "booster") and retard contacts.

   c. For all other S6LN- magnetos, paint tooth and indent mark indicated by the "inner" NORMAL CCW (Figure 7-4B) arrows. For all other S6RN- magnetos, use the "inner" NORMAL CW (Figure 7-4B) arrows.

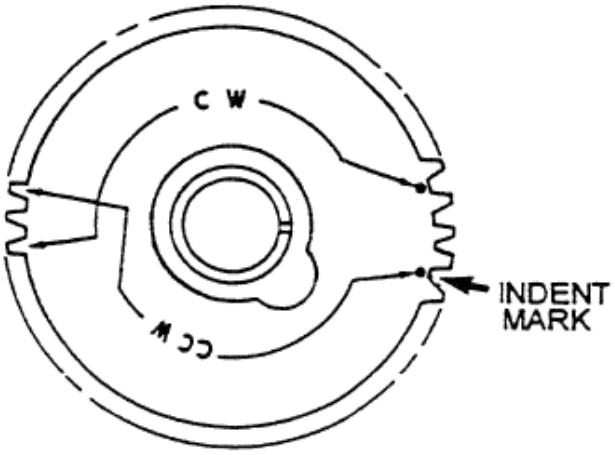

A. Four Cylinder

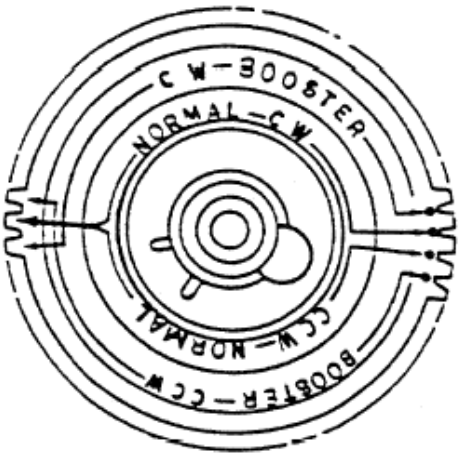

B. Six Cylinder

Figure 7-4. Distributor Gear Timing Marks

7-2.3. Cam, Washer and Pinion Gear Inspection

NOTE: Do not reuse nylon pinion gears (67); replace the nylon pinion gear with sintered iron pinion gear.

1. Visually inspect the cam (63); if the cam exhibits scratches or wear, replace it with a new assembly. Measure the cam washer (62) thickness; replace if not 0.095 ± 0.010 inch thick.
2. Wipe the cam with a clean, lint-free cloth.
3. Submerge the cam completely in a vat of 10-391200 Distributor Block Lubricant heated to 200ºF for 30 minutes.
4. While the cam is still submerged in the oil bath, allow the cam and oil to cool to room temperature together.
5. After cooling, remove the cam from the oil bath, wipe with a lint free cloth and place the cam in service or store the cam in a sealed plastic bag until needed.
6. Do not reuse nylon pinion gears. Replace nylon pinion gear found in the assembly with a current production sintered iron pinion gear (67).

7-2.4. Distributor Block Inspection

NOTE: Current design distributor blocks (79) are made of brown polyester material and have part number and batch code molded into the surface on the tower side. Older blocks made of phenolic (black) material or buna rubber (very dark brown, with letters “cc” molded in the tower side of the block) material may remain in service in unpressurized applications if they incorporate annular felt groove (Figure 7-5) and pass tests outlined below. For pressurized magnetos, use only brown polyester distributor blocks.

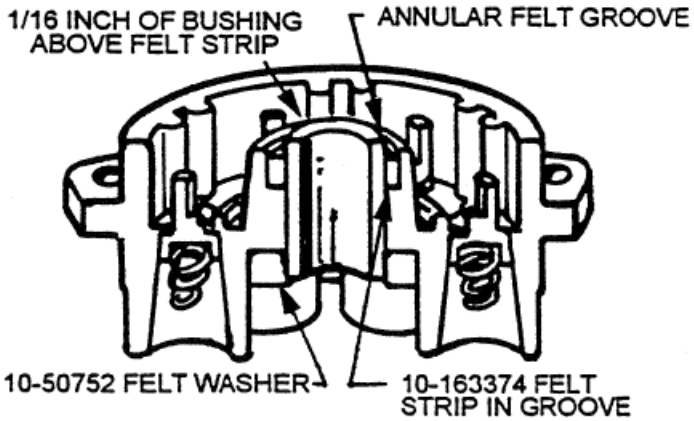

Figure 7-5. Distributor Block Cutaway

1. Inspect brown polyester distributor blocks for batch code. Replace distributor blocks with batch code 8601 or lower.
2. Measure the distributor block bushing for an inside diameter 0.376-0.377 over the entire length of the bushing with a three point micrometer. If the bushing inside diameter exceeds 0.377, discard and replace the distributor block.

3. Examine the distributor block (79) for cracks, particularly around high tension terminal towers, mounting holes and the nose in the center of electrode side.
4. Clean the distributor block according to instructions in Section 5-2,step 4.
5. After cleaning, inspect the distributor block for carbon tracking, which appears as a thin wavy line across the dielectric surface. If suspicious areas are noted, check with the E-5 High Voltage Cable Tester:
   a. Connect the tester ground lead to a distributor block electrode with a No. 2 alligator clip.
   b. Attach the tester high voltage lead (Figure 7-6) to one of the electrodes adjacent to the grounded one.
   c. Tester high voltage will follow a carbon track. Test all inter-electrode spaces. Test between the grounded center bushing and all electrodes. Temporarily assemble the distributor block (79) in the housing (48) and test for carbon tracking between electrodes and housing by connecting to housing and each electrode. Reject the distributor block (79) if it exhibits carbon tracking.

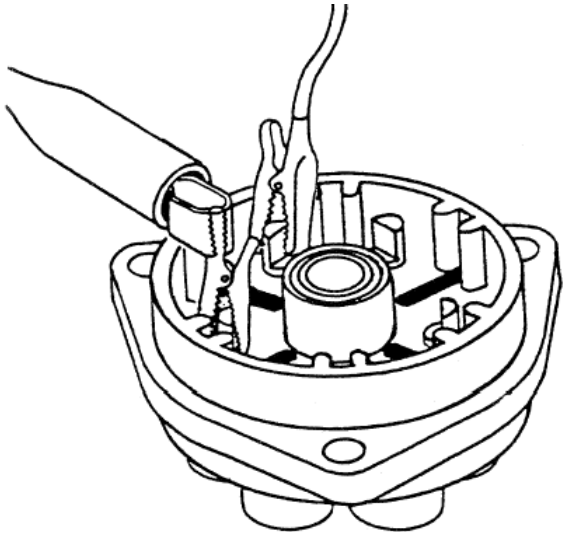

Figure 7-6. Check Distributor Block for Carbon Tracking

6. Inspect contact springs (80), on the tower side of the distributor block (79). If the contact spring appear fuzzy or white, or exhibits signs of burning, rust or corrosion, remove with needle nose pliers and discard. Check springs for proper height by measuring down from the top of tower. If the measurement exceeds 0.422 inch (Figure 7-7), the spring may be deformed or improperly installed. Using a scribe, or similar pointed instrument, wiggle the top of spring in a circular motion to ensure only the bottom turn of the spring is captive in the block insert groove. Recheck spring height; if measurement still exceeds 0.422 inch, remove and replace spring.

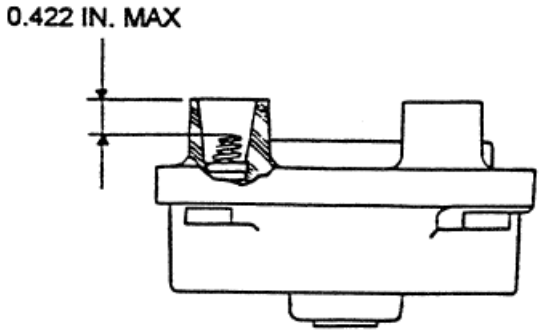

Figure 7-7. Contact Spring Height

7. Using a small scraper or knife, clean the distributor block (79) electrodes to remove any carbonized deposits. Do not attempt to grind or machine the electrodes.
8. If distributor block is phenolic or buna type (see NOTE following step 10) and is not marked with a raised boss or a drill point indentation to the left and adjacent to No. 1 high tension tower (see Figure 7-8), remove old lubricant as follows:
   a. Place the distributor block, high tension towers up, on a piece of absorbent material, such as cardboard, in a 250ºF oven for four hours. This should cause impregnating oil to appear on the bushing surface and on the absorbent material.
   b. Remove the distributor block from the oven and using a clean, dry cloth, immediately wipe all oil possible from the inside diameter of the bushing. It may be necessary to wipe the bushing several times as it cools, as well as to repeat this procedure until the old oil is thoroughly purged.
9. Identify distributor block by stop drilling a 0.125 inch diameter indentation to a depth of 0.016 inch in the location shown in Figure 7-8.

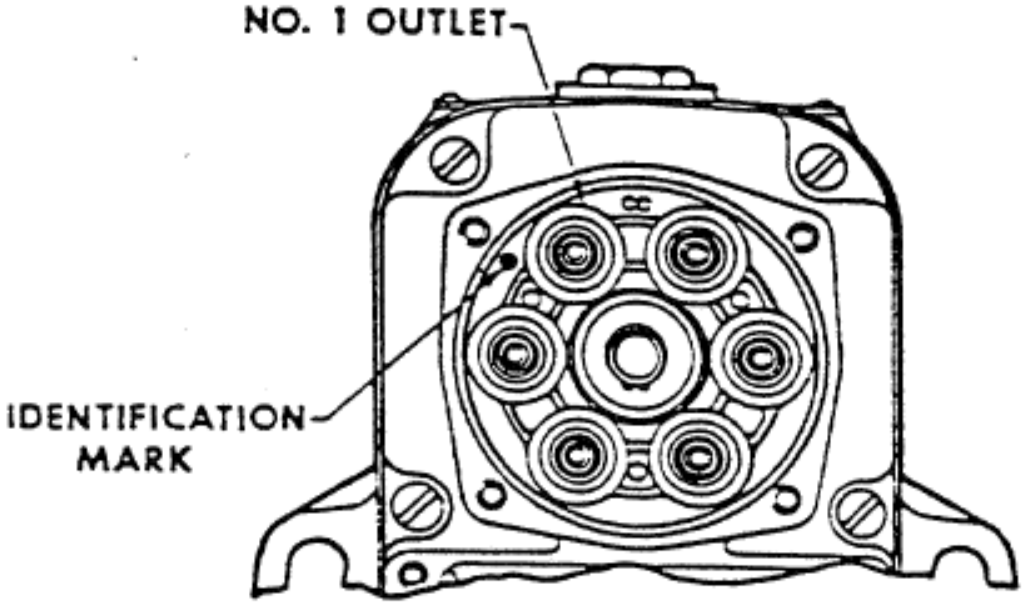

Figure 7-8. Lubrication Identification Mark

10. Impregnate bronze bushing and coat the distributor block:

NOTE: Only “black” phenolic or buna rubber type distributor blocks (79) must be coated at each 500 hour inspection and at each overhaul period. DO NOT COAT POLYESTER “brown” distributor blocks. Bronze bushings in all types of distributor blocks (79) are impregnated with oil (during assembly at the factory) when new and must be oil impregnated at each 500 hour inspection and at each overhaul period. The bronze bushing in the distributor block (79) is impregnated with oil to provide proper distributor shaft lubrication. The phenolic or buna rubber dielectric surfaces are coated to inhibit moisture from sheeting and possibly causing electrical failure. Care should be taken to keep coating away from bronze bushing and to keep oil from coated surfaces.

a. Install a 10-70506-10S Protective Cap over each end of the bronze bushing in the distributor block (Figure 7-9). Brushcoat all surfaces of the distributor block insulating material with 10-391400 Distributor Block Coating. Do not apply the Distributor Block Coating to any exposed surface of the bronze bushing. Allow the Distributor Block Coating to dry for a minimum of 30 minutes before assembling the distributor block (79) with the housing (48) or gear assembly (72).

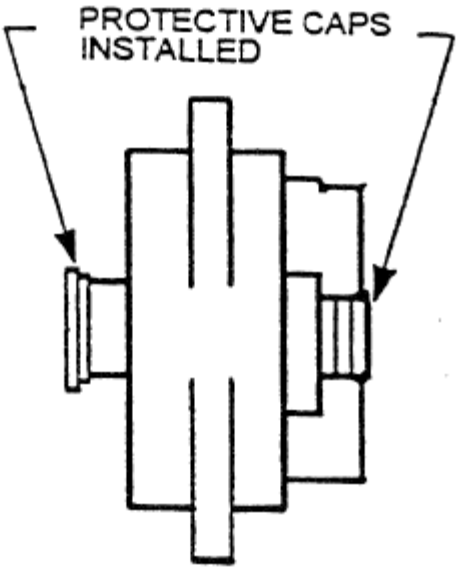

Figure 7-9. Protective Caps Installed

b. Remove the 10-70506-10S protective caps from the distributor block. Insert a cork stopper in one end of the bushing and fill the bushing with 10-391200 Distributor Block Lubricant.

c. Using care not to spill oil on coated surfaces, place the distributor block in an oven and bake the distributor block at 190-210ºF (88-99ºC) for two to three hours.

d. Remove the distributor block and oil from the oven and allow them to cool to room temperature together. (the bushing absorbs residual oil as it cools).

e. Carefully remove the cork stopper and allow excess oil to drain from bushing.

CAUTION: Do not lubricate the felt strip (81) with Distributor Block Lubricant.

11. Install a new dry felt strip (81) in groove on electrode side of distributor block. When strip is properly installed (Figure 7-5), approximately 0.125 inch of the bushing shall be exposed above the felt strip.

12. Before installing new felt washer (82) into the distributor block (79), saturate the washer with 10-391200 Distributor Block Lubricant. Blot excess oil from the washer until the flat surfaces take on a “frosted” appearance, and seat the felt washer in the recess on the tower side of the distributor block.

7-2.5. Capacitor Inspection

1. Visually inspect the capacitor (42) mounting brackets for cracks or looseness. Check capacitor lead for damaged insulation or loose terminal connections. If damage is evident or the terminals are loose, discard capacitor (42).

2. Using an LC-103 capacitor tester, measure capacitance and leakage according to Table 7-1 specifications. Using a multimeter, measure DC resistance, in series. Replace capacitor if it does not meet Table 7-1 specifications.

Table 7-1. Capacitor Test Values

Capacitor Part No.	**10-400572 or 10-400615**	**10-51676**
Capacitance at room temperature, microfarads (µF)	0.375 ± 10%	0.375 ± 10%
DC series resistance, ohms	1.0 max	N/A
Leakage current @ 400 VDC	0.4 µA max	0.4 µA max

7-2.6. Coil and Clamp Inspection

1. Ensure the coil matches current design specifications. The coil must exhibit red epoxy compound, external ground lead and a valid part number (Figure 7-10). Coil may be cylindrical or barrel shaped; discard all old coils.

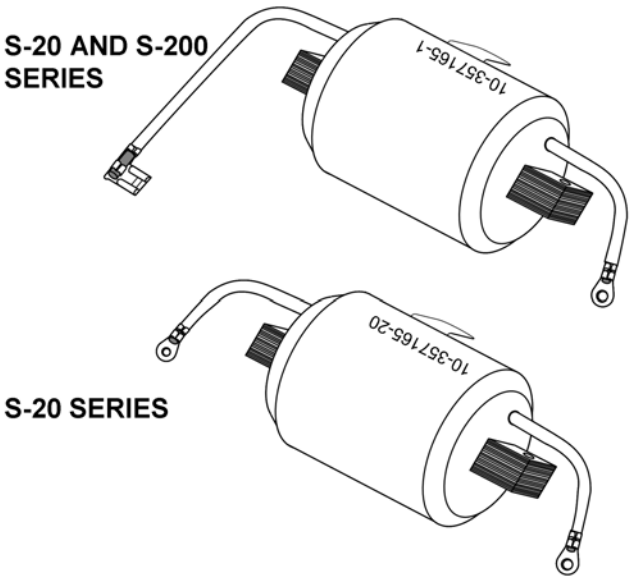

Figure 7-10. Current Design Coils

2. Visually inspect the coil (58):
   a. Inspect the core laminations (58) for wear at the point of contact with pole shoe laminations in the magneto housing. If wear is present, the coil will not fit tightly to laminations and must be replaced, regardless of electrical characteristics.
   b. Visually inspect the coil leads. If the leads exhibit damaged insulation or loose connections. Discard coil with these conditions.
   c. Inspect high tension tab for wear caused by contact with the carbon brush (73), indicated by a visible depression in the tab. If tab is worn, repair coil according to instructions in Section 8-2.1, “Coil Pad Repair.”
   d. Visually inspect the coil case; discard the coil if the epoxy case exhibits cracks or the beginning of cracks.
3. Using a Fluke 8840A Digital Multimeter or equivalent, measure primary resistance between coil leads. Primary resistance shall be 0.2 to 0.6 ohms. Measure secondary resistance between the ground lead and high tension tab. Secondary resistance shall be between 12-16K ohms. Replace coils failing to meet specifications.
4. Inspect core clamps (57) closely. Current production clamps feature a half moon indentation or white dykem (lacquer) paint in the position illustrated in Figure 7-11 and may have a black oxide or silver-colored finish. Discard clamps which fail to meet current specifications or clamps exhibiting wear, physical damage or deformities.

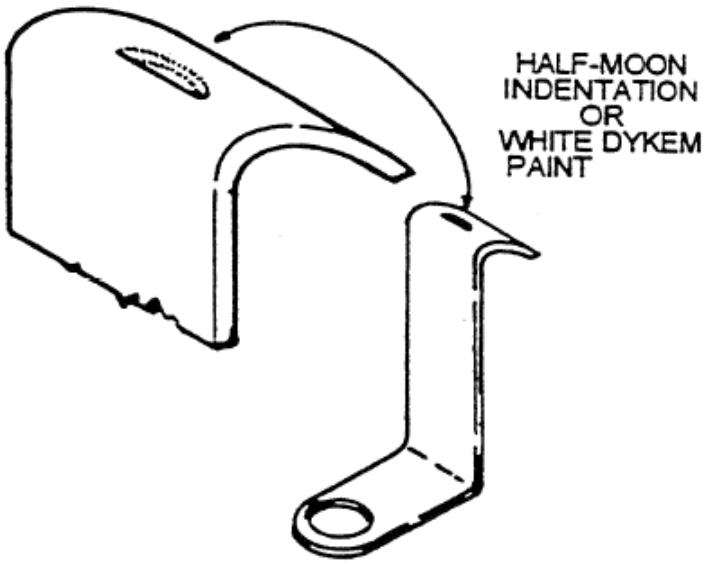

Figure 7-11. Current Design Core Clamp

7-2.7. Impulse Coupling and Related Component Inspection

1. Visually inspect the bushing (5):
2. Inspect for wear or deformation. Look particularly at the surface where the lock washer or nut seat contacts the bushing. If the bushing wear or deformation is present, replace bushing (5).
3. Replace sintered iron bushing with a machined steel bushing (5). Machined steel bushings have an undercut 0.062 wide by 0.005 in. deep immediately behind the bushing shoulder. (Figure 7-12) Refer to the “Illustrated Parts List” in Chapter 11 for correct part numbers. Upon compliance with this step, Magneto Part Number 10-51360-30 converts to Part Number 10-51360-37. Over-stamp the magneto identification plate (52) with the new magneto part number. Identify all other part number magnetos complying with this step by stamping a 0.125 inch high letter “B” in the lower left hand corner of the data plate. Discard sintered iron bushings.

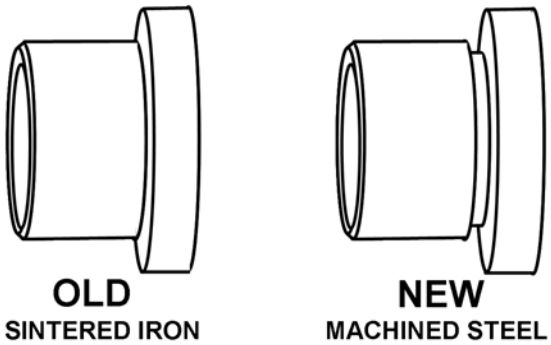

Figure 7-12. Drive Bushings

Procedure continues on next page...

4. Inspect the impulse coupling components:

CAUTION: Regardless of condition or appearance, replace all obsolete design impulse coupling cam assemblies featuring riveted cam axles (Figure 7-13) with current production parts featuring integral flyweight axles with a machined impulse coupling cam.

Figure 7-13. Riveted Impulse Coupling Cam Assembly

a. Ensure impulse coupling cam flyweights are properly heat treated:

NOTE: This test does not apply to cam assemblies with yellow paint (dykem or lacquer) on the heel of the flyweight, or with stamped numbers on flyweight (Figure 7-15), or with more than 300 hours service. Proceed to step b.

NOTE: XXX in Figure 7-14 indicates the location of stamped numbers.

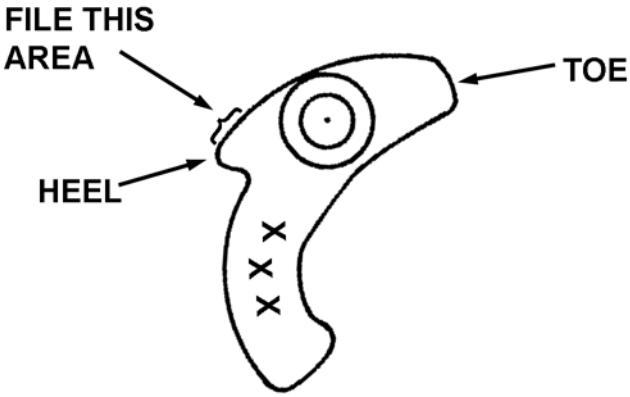

Figure 7-14. Soft Flyweight Check

b. Use finger pressure to push inward on the toe of a flyweight so the heel points outward. Using a fine #1, double cut, 0.50 inch wide file at least 0.09375 inch thick, pass the file across the heel of the flyweight and attempt to remove material. Repeat for the second flyweight. The file should “glide” smoothly over the heel of the flyweight and remove no material. If the flyweight is soft, the file

will not “glide” easily and material will be removed. Discard impulse coupling cams with soft flyweight(s) and replace with a cam with flyweights marked according to the NOTE: following step a.

c. Make an appropriate log book entry indicating compliance with this step, mark the heel of the flyweights with yellow Dykem or lacquer if numbers are not stamped, and stamp a 0.0625 inch high letter “F” in the upper right-hand corner of the data plate (52).

5. Visually inspect flyweight securing washers, snap rings, and flyweights, particularly in area around the axle bore, for cracks. Grip the washer with fingers as shown in Figure 7-15, and exert a turning force in each direction attempting to move the washer. If the washer moves or any cracks are discovered, discard and replace the cam assembly.

NOTE: Never attempt to repair any part of a rejected cam and flyweight assembly (11).

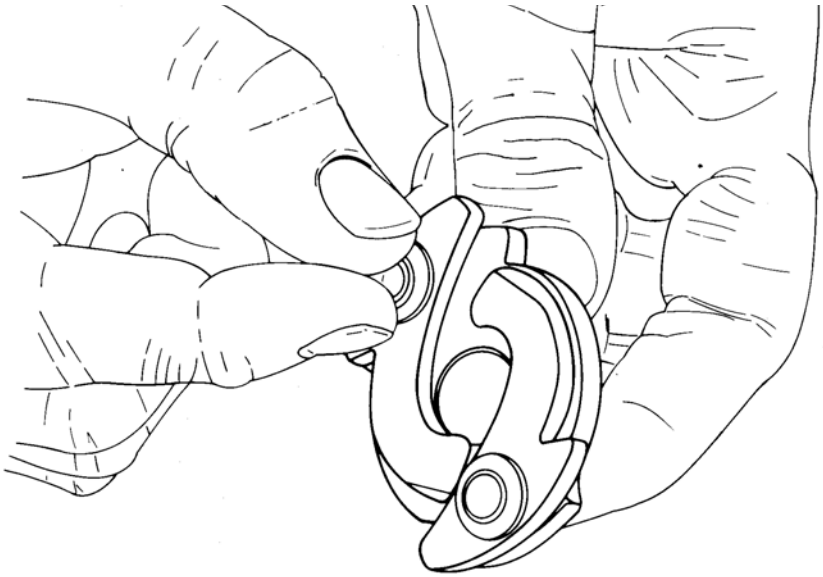

Figure 7-15. Inspect Flyweight Washers

Procedure continues on next page...

6. Inspect the impulse coupling body drive lugs (Figure 7-16). If wear is noted, measure difference between worn and unworn areas of drive lug surface. If difference exceeds 0.015 in., replace the impulse coupling body (9).

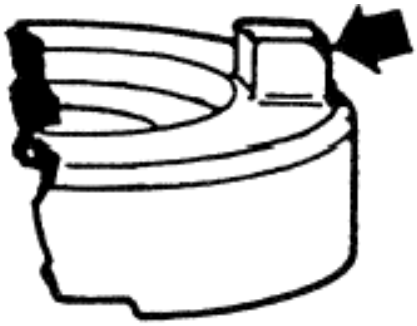

Figure 7-16. Worn Drive Lug

7. Inspect impulse coupling trip dogs (9) for grooves worn by the tail of flyweight or wear at the triggering ramp or cam stop contact areas (Figure 7-17). If either ear shows a perceptible groove or a ridge can be felt when a fingernail is drawn across the surface, reject the impulse coupling body (9).

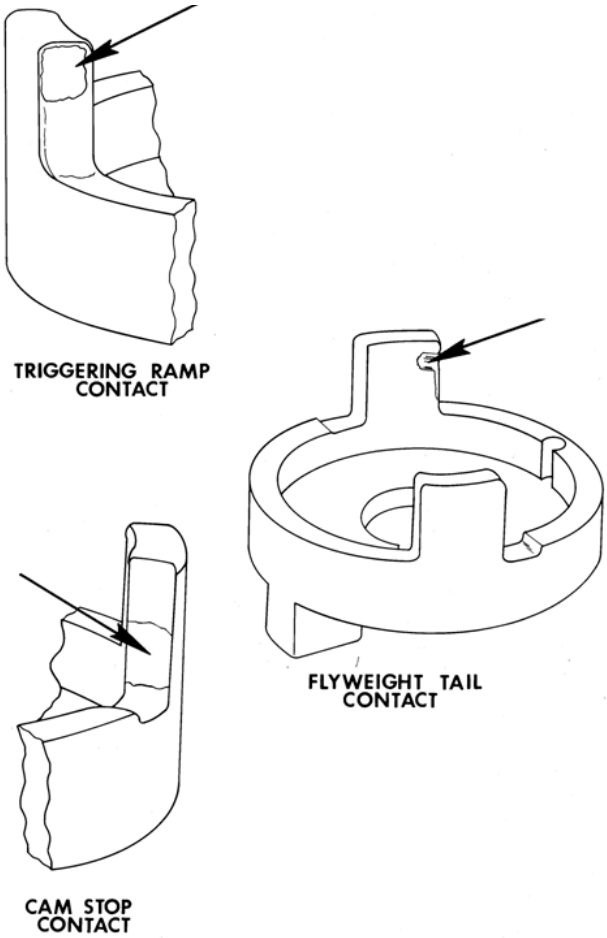

Figure 7-17. Impulse Coupling Body Wear Points

7-2.8. Magneto Housing and Cover Inspection

1. Examine both housings (48 and 50) for cracks, stripped threads or other damage. Check the bearing outer race seats in both housings for wear or “peening” due to operation with loose bearings. Measure the bearing bore at four points with 90º of separation. If bearing bores are worn, peened or exceed Table 7-2 dimensions, replace the housing. If an interference (press-fit) condition is not obtained after installation of new bearing races, replace the housing.

Table 7-2. Bearing Seat Limits

Bearing Seat Location	Diameter
Magneto Housing (50)	1.3769 Maximum
Distributor Housing (48)	1.1014 Maximum
Rotor (54), Front	0.5904 Minimum
Rotor (54), Rear	0.3937 Minimum

2. Perform a Fluorescent Penetrant Inspection on the cleaned, non-ferrous magneto housing and cover according to ASTM E1417 methods. ASTM E1208, ASTM E1209, ASTM E1219 methods may be used. Inspection must be performed by qualified technicians certified to perform the inspection.

   a. Look for cracks or indications of cracks, especially in the areas adjacent to the mounting flange.

   b. Cracks in the magneto housing or cover is cause for rejection; destroy cracked magneto housings or covers to prevent possible return to service.

   c. Look for indications which break into corners, edges, holes, or fillets. Identify parts that contain linear indications which cannot be reworked.

   d. Follow the fluorescent penetrant manufacturer's instructions for the equipment and materials required to perform the inspection, safety precautions and disposal of used inspection media.

   e. Label each part's inspection status and required action, if any.

   f. Follow the fluorescent penetrant manufacturer's instructions to remove penetrant residue from the inspected, serviceable parts.

WARNING

Do not attempt to repair worn bearing bores by any means. If bearing bores are oversize, replace the housing. Do not reuse a housing if it has been staked, punched, or knurled.

Procedure continues on next page...

3. Inspect coil seat areas (Figure 7-18) in the magneto housing (50) for wear. If a ridge can be felt when a fingernail is drawn across the coil seating surface at the top of the pole shoe laminations, replace the housing.

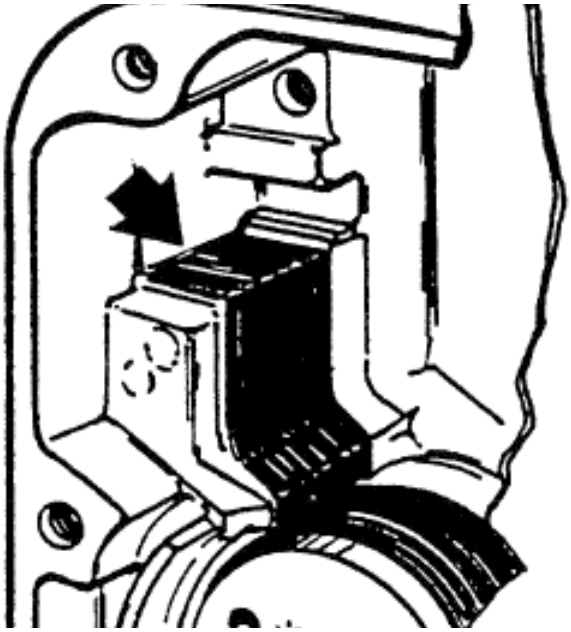

Figure 7-18. Wear in Coil Seat Area

4. Replace the housing (48 or 50) if evidence of corrosion or galling is found at the mating surfaces.
5. Inspect the cover (15) for cracks, stripped threads or other damage. Replace cracked or damaged covers, or covers with stripped threads.
6. Inspect the impulse coupling stop pin (60). If the stop pin is loose, bent or damaged, or shows signs of wear, remove and replace the stop pin:
   a. Remove pin (60) using a steel bar, 1/4-20 nut and plain washers (Figure 7-19). The bar should measure a nominal 1 x 3 x ¼ inch with a hole drilled in the center large enough to fit over the stop pin. Note the hole from which the pin was removed.
   b. Measure the size of the stop pin bore:
      (1). Attempt to insert a 0.2800 inch gauge pin in the housing (50) stop pin boss. If the gauge pin will not enter the boss, the housing was not designed to accept a stop pin; obtain a housing (50) designed for a stop pin (See Chapter 11) and repeat the measurement.
      (2). If the 0.2800 inch gauge pin enters the stop pin boss bore, measure the bore with a 0.2820 inch gauge pin; a 0.2820 inch gauge pin should not enter the bore deeper than 0.120 inch below the face of the housing.
      (3). If the 0.2800 inch gage pin and 0.2820 gauge pin measurements pass, replace the stop pin with a standard size stop pin according to instructions in step c, otherwise proceed to the next measurement.

(4). If the 0.2820 inch gauge pin enters the bore deeper than 0.120 inch below the face of the housing, measure the bore with a 0.2840 inch gauge pin. If the 0.2840 pin will not insert in the bore deeper than 0.120 inch below the face of the housing, replace the stop pin with a 0.0005" Authorized Oversize stop pin according to instructions in step c. If the 0.2840 gauge pin enters the bore deeper than 0.120 inch, the bore exceeds allowable limits, replace the housing.

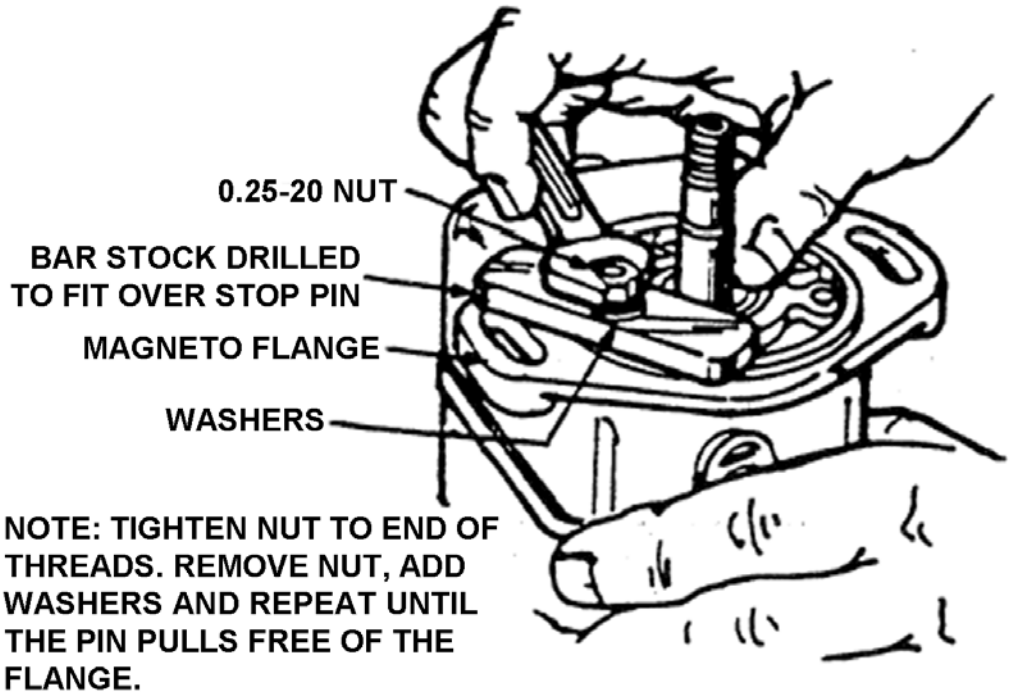

Figure 7-19. Impulse Coupling Stop Pin Removal

c. Place the housing (50) on a wood block and press new stop pin (60) into position using an arbor press. The dimension from the top surface of the pin to the face of the mounting flange shall be 0.688 + 0.016 - 0.000 inch for all types except housing (50) P/N 10-81942 used with S6RN and S6LN-25 magnetos, in which case the dimension shall be 0.500 + 0.016 - 0.000 inch.

7. Inspect retard lead assembly (23) or tachometer leads (17) for damage. Inspect the terminals for proper attachment to leads. Examine leads for damaged insulation. Check the grommet (19) in the cover for damage. Ensure the retard lead (23) is insulated from ground with p-lead installed. Replace damaged leads or grommet.

7-2.9. Rotating Magnet Inspection

1. Inspect the rotating magnet (54) for damaged threads, cracks in the magnet casting, scored or otherwise damaged laminations, and wear or galling in the bearing race seat area, cam and gear seat areas. Measure each bearing seat at 90º intervals. If either bearing seat exceeds limits shown in Table 7-2, replace the rotating magnet. Visually inspect the drive end of the rotor shaft for grooves or scratches that might allow oil to pass under the sleeve bearing. If an interference (press-fit) condition is not obtained after installation of new bearing races and sleeve bearing, replace the rotating magnet. Discard the rotating magnet if any of these conditions are found.

   CAUTION: Replace any rotor matching the features depicted in Figure 7-20 with current specification rotor.

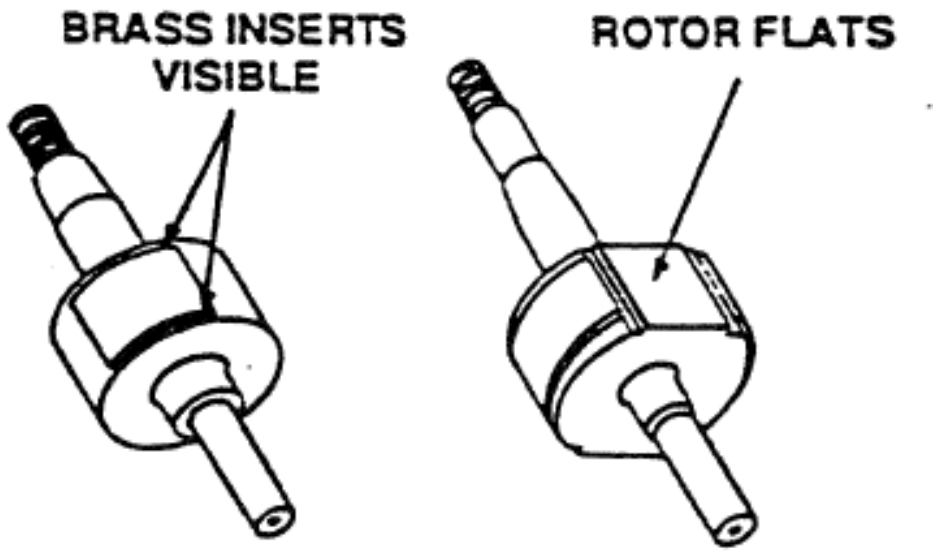

Figure 7-20. Conditions Requiring Rotating Magnet Replacement

7-2.10. Sleeve Bearing Inspection

1. Inspect the sleeve bearing (69) to determine if it matches the current production specifications. The current production sleeve bearing is steel and has a ground finish characterized by a bright silvery surface. The old design is sintered iron which has a dull gray appearance. Regardless of condition, replace the sintered iron sleeve bearings with the current production steel bearing.
2. Inspect the steel sleeve bearing (69) for scratches, pits or scoring that might allow oil to enter magneto. If sealing surface of the steel sleeve bearing is worn, bearing can be reversed when reinstalled to provide an unused surface. If sleeve bearing is worn at both locations, replace it with a new sleeve bearing.

7-2.11. Contact Assembly Inspection

1. For magnetos equipped with tachometer contacts, inspect the condition of the insulating bushings (38). Current production bushings are constructed of phenolic material with annular (circular) laminations. Replace the bushing if laminate layers are parallel, or if the bushing is cracked, crushed or otherwise damaged.
2. Inspect the condition of the contact point flag terminals using the criteria in Figure 7-21. Replace the affected lead assembly if flag terminals do not meet the conditions depicted in Figure 7-21.

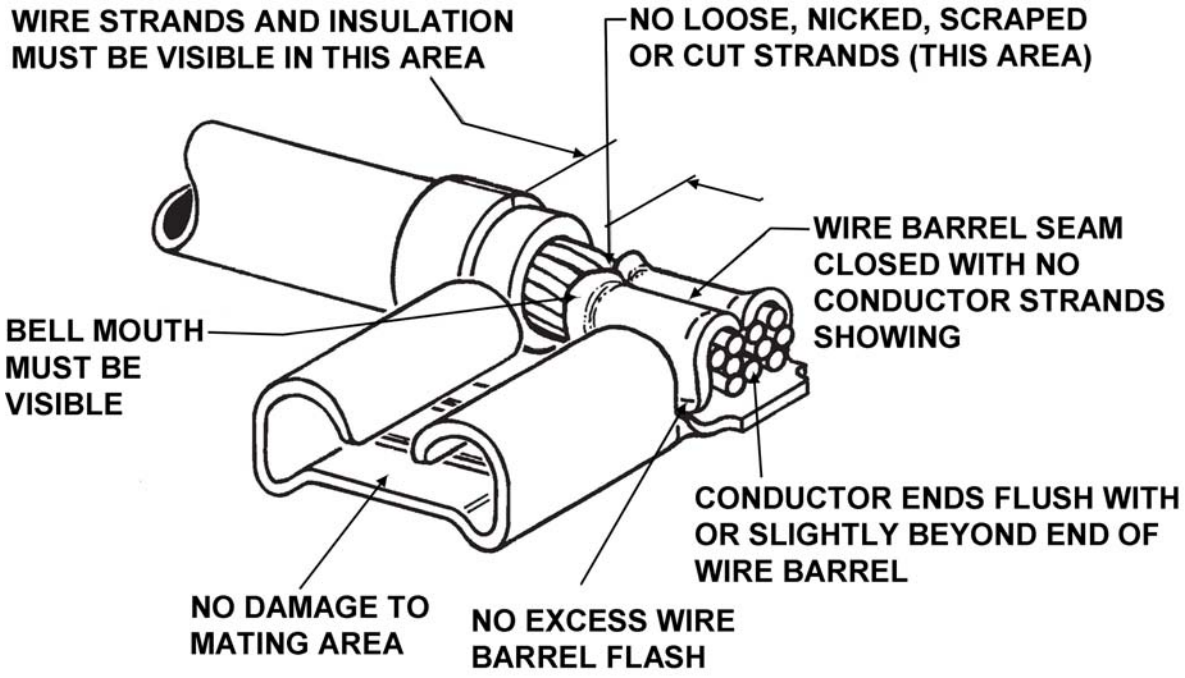

Figure 7-21. Flag Terminal Inspection Criteria

Intentionally Left Blank

Section 8. Repair

8-1. General

NOTE: Index numbers in parentheses refer to the exploded views of the magneto in Figure 1 in Section 11 unless otherwise specified.

Refer to Table 10-2 for a list of tools and materials required for magneto repair.

8-2. Detailed Repair Procedures

8-2.1. Coil Pad Repair

1. Place a piece of phenolic or metal between the terminal pad and the coil to prevent damage to the coil. Drill a 0.125, + 0.016/-0.000 inch diameter hole (Figure 8-1) through the center of the high tension terminal pad.

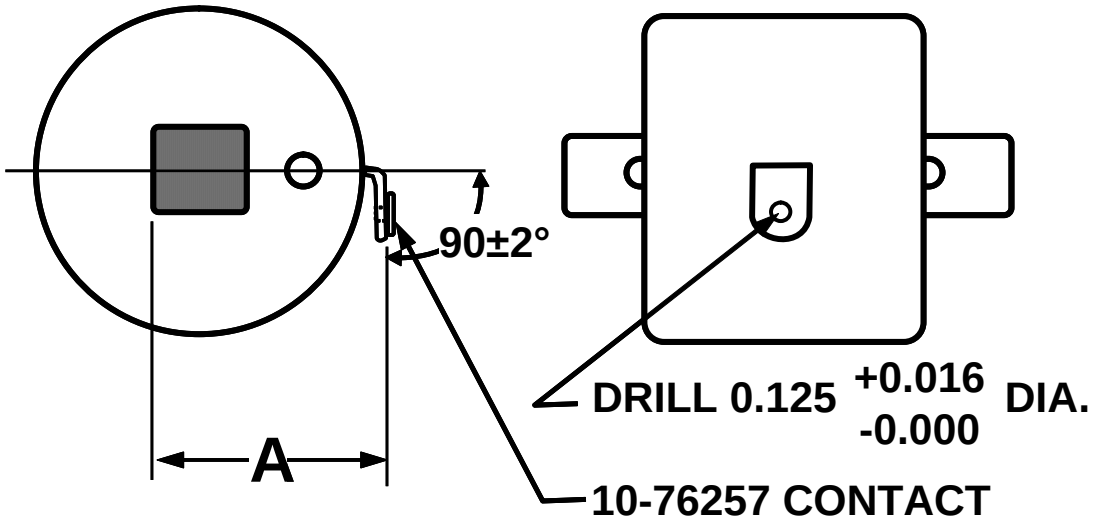

Figure 8-1. Coil Pad Repair

WARNING

Isopropyl Alcohol (IPA) is Flammable - Do not use near an ignition source. Use only with adequate ventilation. Use appropriate personal protective equipment to protect eyes, skin and clothing from exposure. Avoid breathing IPA vapors. Store IPA only in approved containers.

2. Lightly abrade the surface of the terminal and clean with isopropyl alcohol. Tin the surface of the coil terminal and the protruding side of the 10-76257 contact with solder and flux.

3. Position the contact so the protrusion extends through the 0.125 inch hole in the terminal pad. Flow solder between the coil pad terminal and the 10-76257contact with a soldering iron. Check the finished joint for good electrical bonding; the soldered joint between the coil terminal pad and the contact should be smooth and even.

4. After the terminal has cooled, inspect the installed contact. The terminal angle should be 90 ±2° off the horizontal axis of the coil core and the distance from the coil core to the outside of the 10-76257 contact must not exceed 1.246 inches as illustrated in Figure 8-1.
5. Inspect the coil according to instructions in Section 7-2.6.

Section 9. Assembly

9-1. General

Refer to Table 10-1 for a list of materials and tools required during assembly. Refer to Figure 1 in Section 11 for magneto exploded view. Numbers in parenthesis following part names correspond to the index numbers in the exploded view.

WARNING

Adhere to the fastener torque specifications in the assembly instructions. Failure to properly torque fasteners places the Aiworthiness of the entire assembly in question.

NOTE: The following parts must be replaced 100% with new parts upon removal from the magneto, regardless of whether disassembly is for the purpose of inspection, parts replacement or overhaul: Lock Washers (3, 13, 34), Screws (12, 41, 47, 56, 61 & 78), Retaining Ring (74), Oil Deflector (55), Oil Seal (59), Bearings (64, 70), Felt Strip (81), Identification Data Plate (52), and Pin (1). If installed, the Spring (10) and Gaskets (14, 49) must also be replaced.

The following parts may be reused after maintenance inspections per Section 6-2.1 and Section 6-2.3, but must be replaced at overhaul: Main and Retard Contact Assemblies (39), Felt Washer (82), and Carbon Brush (73).

9-2. Detailed Assembly Procedures

9-2.1. Bearing, Pinion Gear and Cam Assembly

CAUTION: If bearings are not a press fit in the housings, (48, 50) or on the rotating magnet (rotor) (54) shaft, do not attempt to repair worn bearing seats by knurling, staking, punch marking or any other means. If bearing seats are loose replace the housing, (48, 50) or rotor (54).

NOTE: Serviceable rotating magnets must be recharged before installation in magneto.

1. Support the rotating magnet shaft (54) on a block of wood, tap the pinion gear Woodruff key (53) into the keyway and install the gear (67) on the shaft:

   a. Four cylinder magnetos incorporate a pinion gear (67) with an arrow on each side. If the magneto is designed for clockwise rotation, install the gear on the shaft so the arrow points in a clockwise direction when viewed from the drive end (Figure 9-1). If magneto is designed for counterclockwise rotation, arrow must point in a counterclockwise direction when viewed from the drive end.

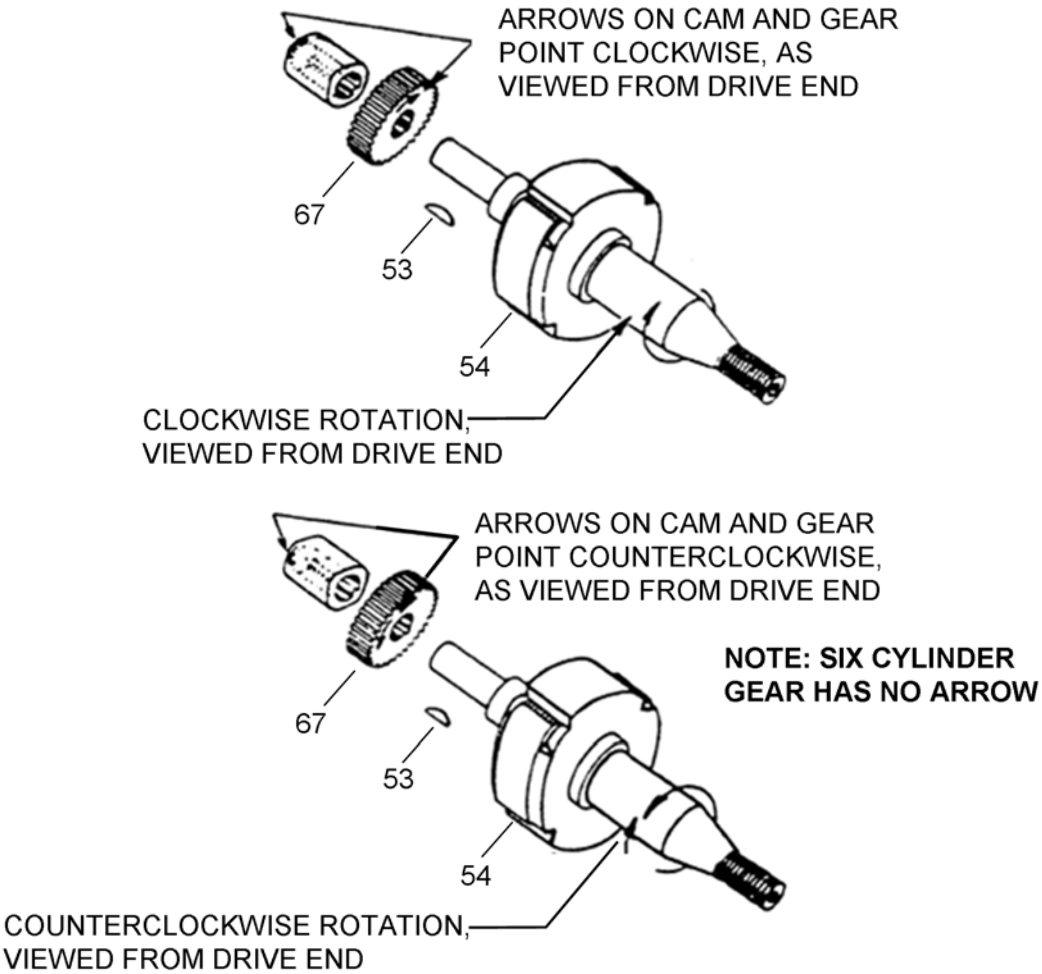

Figure 9-1. Correct Assembly of Gear and Cam

b. Six cylinder magnetos incorporate a pinion gear (67) which has a chamfer on only one end of the tooth. There are no arrows on this gear. The chamfered end of the tooth may be installed in either direction.

2. Place a plain washer (66) on the shaft next to the pinion gear, followed by shim washers (65) totaling approximately 0.036 in. thickness. Using the small end of the 11-6924-1 Pressing Tool and an arbor press (Figure 9-2), press the inner race of new bearing (64) on the rotor shaft, lettered side toward the pressing tool.

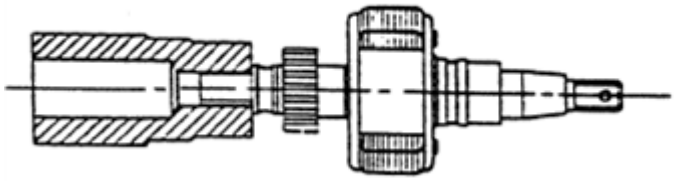

Figure 9-2. Cam End Bearing Inner Race Installation

3. Position shim washers totaling 0.012 in. thickness on the drive end of the rotor shaft. Using the large end of the 11-6924-1 Pressing Tool and an arbor press (Figure 9-3), press the inner race of the new bearing (70) on the shaft, lettered side toward the pressing tool.

4. Place the bearing cage assemblies (64, 70) on their respective inner bearing races on rotor shaft.

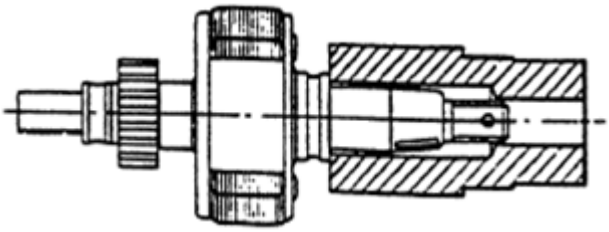

Figure 9-3. Drive End Bearing Inner Race Installation

5. Using large end of the 11-6924-1 Pressing Tool and an arbor press (Figure 9-4), seat the outer races of the bearings (64, 70) in the magneto and distributor housings.

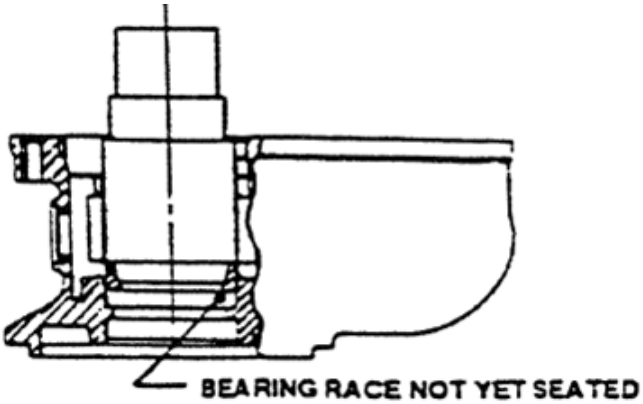

Figure 9-4. Bearing Outer Race Installation

6. Temporarily assemble the rotor (54) with the gear, bearings and shim washers in the housings (48, 50), using a gasket (49), when applicable. Install three screws with lock washers (47) adjacent to the rotor to secure the housing. To avoid excessive bearing preload, test the rotor for free rotation as the screws are tightened; the rotor must turn freely. If friction increases on the bearings as the screws are tightened, disassemble and remove shim washers from the pinion gear end of the rotor. Reassemble the magneto and tighten the screws to 30 to 35 in-lbs. of torque. Apply a force of 30 lbs. in each direction of rotation to determine total end play. Adjust the number of shims to obtain the total end play of 0.0005 to 0.0015 in. loose.

7. When proper bearing preload is achieved, the rotor will spin freely with 0.0005 to 0.0015 inches of end play and no perceptible radial play of the shaft. If either a tight or too loose condition is found, repeat the shimming procedure.

   CAUTION: If the rotor binds or rubs during rotation, the rotor shaft may be bent, the rotor bore may be contaminated with debris, or a burr on the rotor (54) or housing (50) could be the cause. Do not attempt to straighten a bent rotor shaft; replace the rotor (54). Remove debris and burrs, as necessary.

8. After satisfactory preload is obtained, separate the distributor and magneto housings and remove the rotating magnet. Pack Magneto Grease 10-400550-1 in the bearing cages (64 and 70).

9. Apply an even coating of clean, 30 wt. aviation engine oil to the drive end of the rotor shaft, position the sleeve bearing (69) on the drive end of the rotor shaft (Figure 9-5) and press the sleeve bearing into position with the 11-6924-1 Pressing Tool.

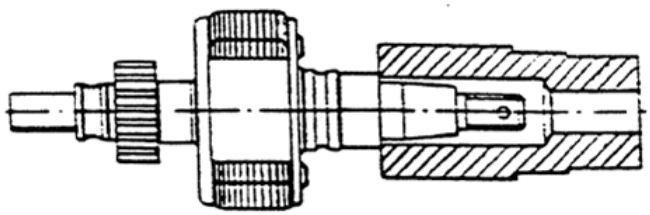

Figure 9-5. Sleeve Bearing Installation

   CAUTION: If self-locking cam securing screw is removed or loosened at anytime, always replace with a new self-locking screw and apply torque to the specified value.

   Before installing, measure thickness and replace washer (62) if it is not 0.096 ± 0.010 inch thick.

10. Place the cam (63) on shaft so the arrow on cam points in the correct direction for magneto rotation (Figure 9-1). Secure the cam to the shaft with a *new* self-locking cam screw (61) and washer (62). Torque the screw to 21 to 25 in-lbs.

9-2.2. Magneto Coil Installation

CAUTION: After coil installation, verify the coil clamps secure the coil tightly against the pole shoes in housing. If there is any play at this point, wear will occur, the parts will loosen, and magneto output will be degraded.

1. Position the coil (Figure 1) (58) in the magneto housing (50) so the coil primary lead fits in the provided slot in the housing.
2. Replace coil core clamps (57) that do not match the illustration in Figure 7-11.
3. Secure one side of the coil in the magneto housing with a screw w/lock washer (56) and coil core clamp (57). Sandwich the ground lead terminal between a screw w/ lock washer (56) and coil core clamp (57) and fasten the ground lead terminal to the magneto housing with the screw w/lock washer.
4. Tighten screws (56) to 20 to 30 in-lbs. of torque. Press the coil primary lead into the slot in the housing.

9-2.3. Distributor Block and Gear Assembly

1. If tower springs (Figure 1) (80) require replacement, use the 11-8627 Spring Seating Kit. Insert the Spring Insertion Guide in the distributor block (79) tower outlet hole as shown in Figure 9-6. Place contact spring (80), large end down, in the top of the guide. Position the Plunger Assembly with the Handle attached, over the small end of the spring, pushing the spring in to the tower, while turning the handle counter-clockwise to seat the spring in the recess of the distributor block tower (79). The spring is properly installed when the bottom turn of the spring is caught in the distributor block bushing and the top turn of the spring is approximately centered in tower outlet. Check spring height according to Section 7-2.4, step 6.

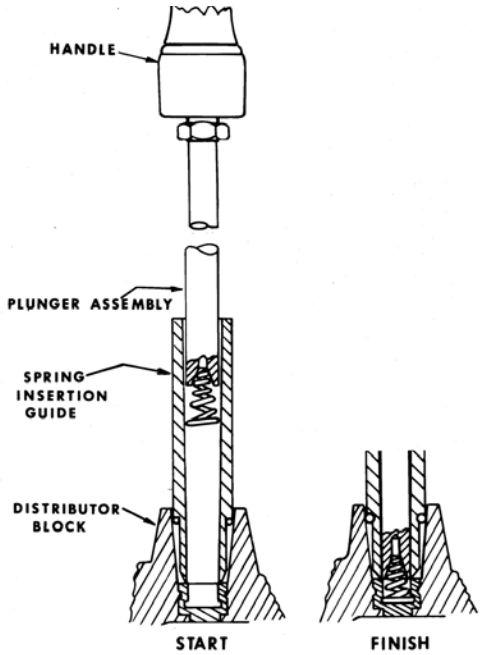

Figure 9-6. Contact Spring Installation

2. Position the distributor block (Figure 1) (79) in the distributor housing (48) and secure with three *new* screw, lock washer and washer (78) assemblies. Ensure the distributor block is fully seated in the housing, then tighten the screws evenly, first to 4-8 in-lbs. torque, followed by a final torque of 16-20 in-lbs.

3. Form the felt strip (81) in a ring and install it *dry* in the deep groove next to the distributor block bushing so that it does not interfere with the washers (76, 77).

4. Saturate a new, or clean serviceable felt washer (82) with P/N 10-391200 distributor block lubricant. Blot excess oil from washer (26), until the flat surfaces take on a "frosted" appearance. Seat washers in the recesses on the tower side of the distributor block (79).

5. Place a nylon washer (77) and (0.562 in. OD) steel skid washer (76) on the gear (72) shaft and slide the large distributor gear shaft (72) in to the distributor block (79). Secure the gear on the shaft with a (0.750 inch OD) washer (75) and retaining ring (74). Verify the retaining ring snaps firmly into mating groove. Do not stretch the ring out of shape during installation; if the ring is loose fitting on the shaft, replace it. Do not attempt to reshape a loose retaining ring.

6. Install the carbon brush (73) in the hole in the distributor gear (72) shaft.

   NOTE: The carbon brush spring in the distributor gear may be a loose fit.
   Do not tip the distributor housing at an angle such that brush can fall out.

7. Turn the Distributor Gear (72) at least one complete revolution by hand to ensure freedom of movement. The distributor gear electrode must not contact the distributor block electrodes. Spray the gear teeth with MS-122AD dry teflon lubricant.

9-2.4. Rotor Installation

1. Lightly coat the housing pole shoes and rotor pole pieces with MIL-PRF-32033 rust preventive. Spread three drops of clean, 30 wt. SAE J 1899 aviation engine oil on the surface of the sleeve bearing (69). Carefully position the rotor (54) in the distributor housing (48).

2. Mesh the teeth of the distributor gear (72) and pinion gear (67) such that chamfered tooth of the pinion gear (67) aligns with the timing mark painted (Figure 9-6) on the distributor gear in Section 7-2.2, step 5.

3. Thread the coil lead through the passage in the distributor housing to the breaker compartment. Position the gasket (49), if used, between the housings (48 and 50). Push the housings straight together, allowing the rotor shaft to extend through the magneto housing. Ensure the bearing parts mate properly. Do not allow the housings to twist or turn as this may break the carbon brush or dislodge the coil lead. Verify the carbon brush rests on the coil high voltage terminal. Secure the housings with *new* screws with lock washers (47). Apply torque of 25 to 35 in-lbs to the new screws (47).

4. Verify the rotating magnet turns freely and has correct bearing play according to Section 9-2.1, step 7.

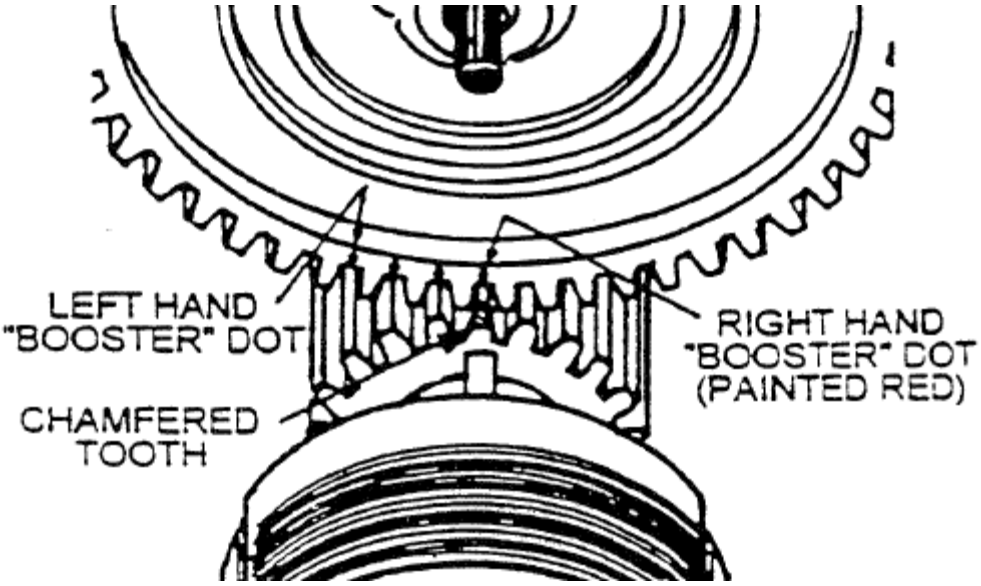

Figure 9-7. Distributor and Drive Gear Meshing

9-2.5. Contact Assembly Installation

1. Before installing new contact assemblies (39), check the cam follower felt for adequate lubrication by squeezing the felt tightly between the thumb and forefinger. If fingers are moistened with oil, felt is adequately lubricated and no more oil is needed. If not, apply three drops of 10-86527 Breaker Felt Lubricant to felt pad. Allow approximately 30 minutes for the oil to penetrate the felt and the thinner in the compound to evaporate. Avoid getting oil on the contacts. Blot excess oil with a clean cloth.

   CAUTION: Do not use contact assemblies P/N 10-357173 marked with Batch Code 0690 and P/N 10-357174 marked with Batch Codes 4289 through 1790. Batch Code format: WWYY. Batch Code is ink stamped on the mounting surface of part.

   NOTE: Presence of oil on contact points attracts and holds contaminants, adversely affecting contact assembly performance. Do not remove the new contact assemblies from the shipping containers until ready for installation. At installation, carefully blot any oil on contact point surfaces with a piece of clean hard cardboard, such as a business card. Ensure no paper particles are left between the contact surfaces.

2. Install the contact assemblies (39) in the contact compartment. Main and retard contact assemblies both require a screw with lock washer (36) at the pivot end, and a screw with lock washer (36) and plain washer (37) at the slotted end. If a tachometer contact assembly is used, install the contact assembly, insulating plate (40) and insulating bushings (38) with screws and lock washers (36) and plain washer (37). Do not tighten contact securing screws fully until final adjustment of contact clearance and “E” gap is complete.

9-2.6. Capacitor Installation

1. Secure capacitor P/N 10-51676 (42) in the contact compartment using screw with washer (41) and 20 to 25 in-lbs. of torque. Secure capacitor P/N 10-400572 or 10-400615 to the contact cover (15) with *new* screws with lock washers (41); tighten the screws to 8 to 12 in-lbs. of torque.
2. For capacitor mounted in the housing (48), connect the coil primary lead and capacitor lead to the contact assembly with a screw (33); torque the screw to 7 to 9 in-lbs. of torque. Magnetos with a ground terminal on flat-type contact cover use a separate ground terminal spring (35). This spring must be assembled at the same time the leads are connected and must fit directly against breaker assembly bracket to ensure correct position. Verify the coil primary lead does not rest against the edges of housing (48) (Figure 9-8). For capacitors mounted in the cover (15), connect the coil primary to the main contact as shown in Figure 9-9 or Figure 9-10. Set the capacitor (42) and cover (15) assembly aside until after magneto internal timing is complete.
3. If used, install a bushing (45) in the threaded hole in the housing (48); tighten the bushing (45) to 120-156 in-lbs. of torque.

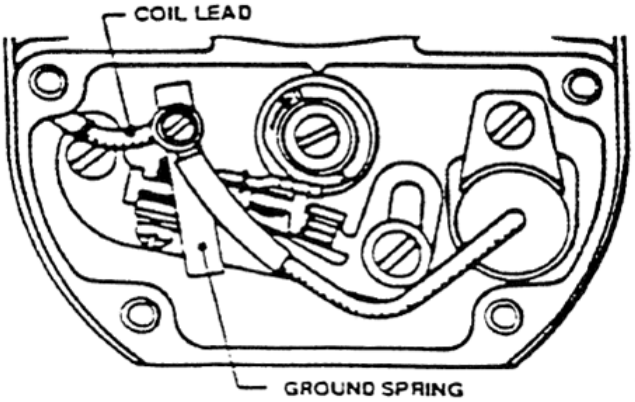

Figure 9-8. Lead Routing with Ground Terminal in Flat Cover

NOTE: colored wires in the following examples are for clarification only; colors do not represent magneto wire colors

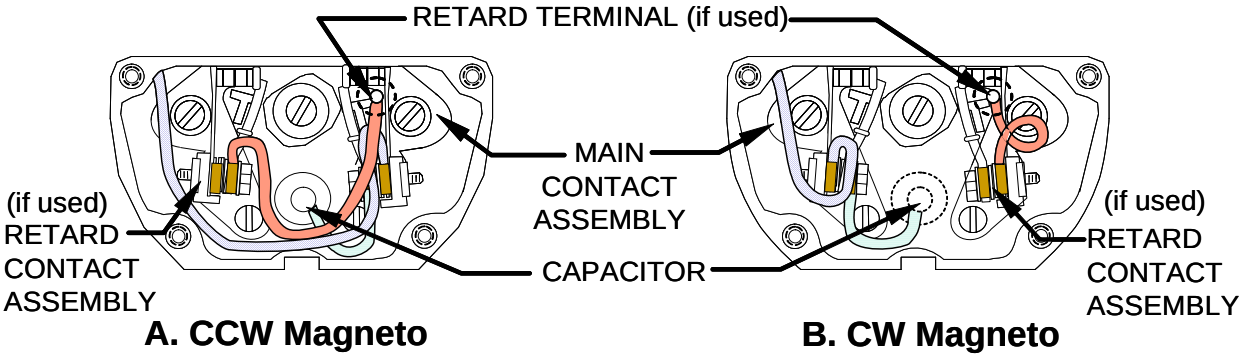

Figure 9-9. Lead Routing in Contact Compartment - Long Cover

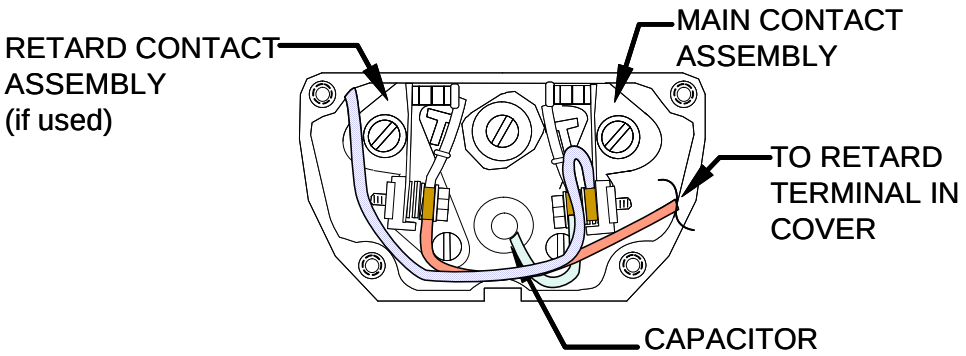

A. Counterclockwise Rotation Magneto

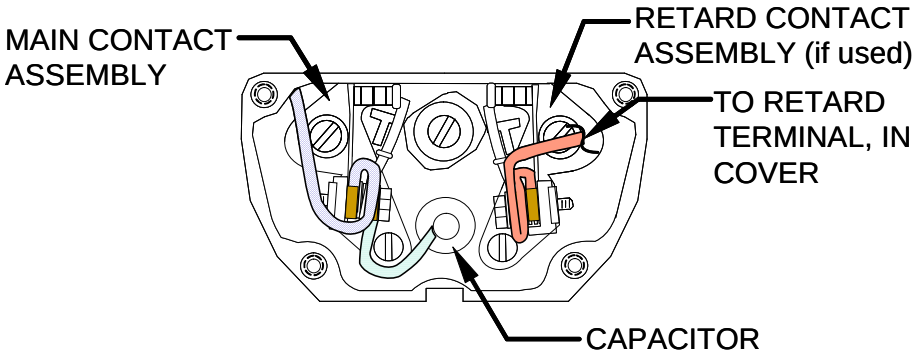

B. Clockwise Rotation Magneto

Figure 9-10. Lead Routing in Contact Compartment - Short Cover

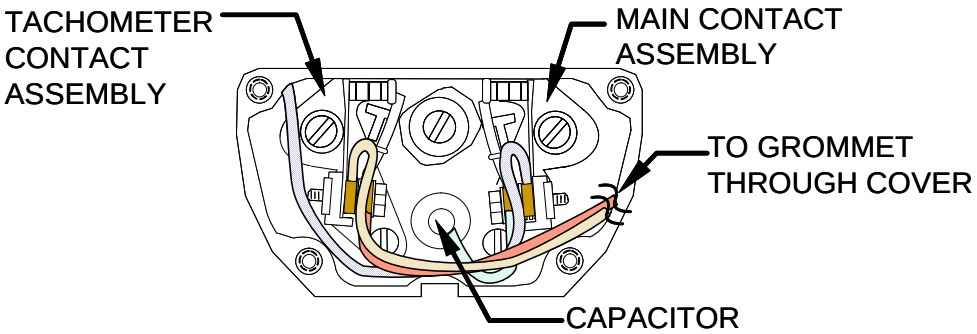

Counterclockwise Magneto with Tachometer Contacts

Figure 9-11. Lead Routing with Tachometer Contacts

9-2.7. Oil Seal and Oil Slinger Installation

1. Apply a thin film of clean, 30 wt. SAE J 1899 aviation engine oil to the lip of a *new* oil seal (59). Carefully slide the new oil seal on to the rotor shaft, avoiding contact with threads or keyway, and position the seal squarely at the edge of the recess in housing. Place the magneto in an arbor press with the contact compartment rim supported by a block of wood and press the *new* oil seal in to the flange with the 11-6924-1 Pressing Tool.

   CAUTION: After installing oil seal and deflector, check cam securing screw (61) torque for 21 to 25 in-lbs. to ensure the cam washer (62) did not deform during pressing operation. Replace the washer (62) and screw (61) if washer deformed.

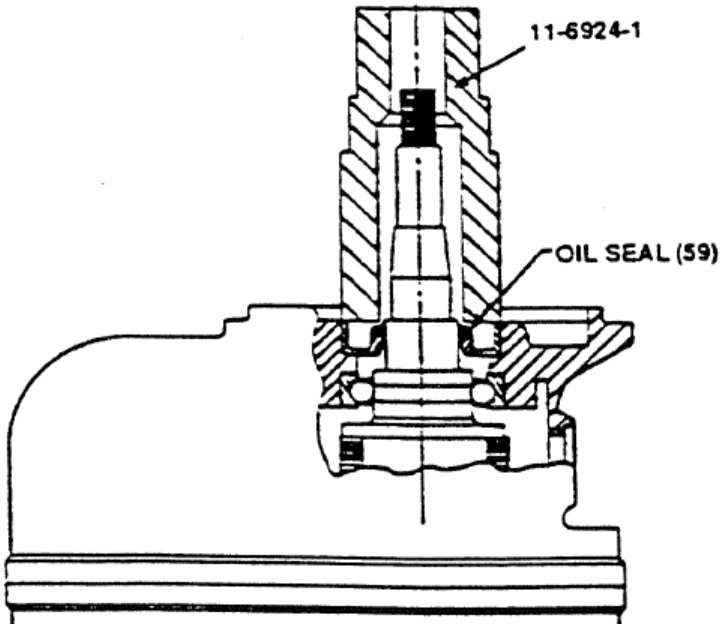

Figure 9-12. Oil Seal Installation

2. Rest the cam securing screw on a wooden block and press a new oil deflector (55) on to the rotor (54) until it seats against the sleeve bearing using the 11-6924-1 Pressing Tool.

9-2.8. Impulse Coupling Assembly and Installation

1. Check cam assembly (11) and body (9) for magnetization which would prevent flyweights from engaging. Hold assembly as shown in Figure 9-13 and push upper position flyweight tail against body (9) trip dog. When released, flyweight tail must drop down. If flyweight tail sticks to body, parts are magnetized and coupling may not function. Perform test on both flyweights.

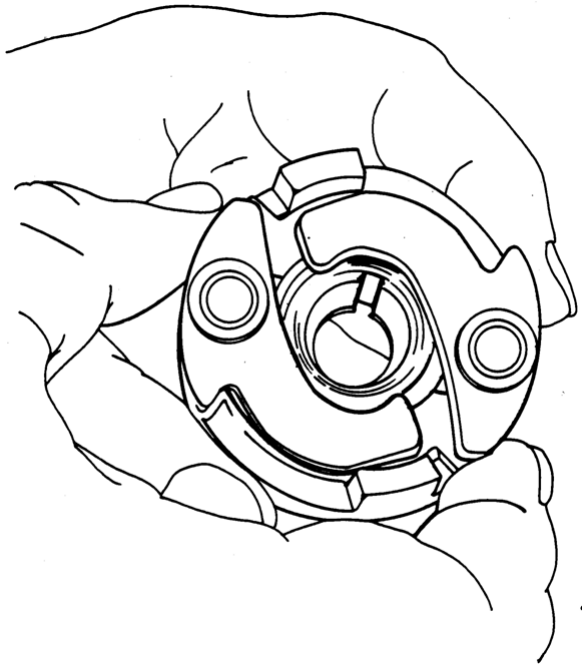

Figure 9-13. Check Impulse Coupling for Magnetization

NOTE: Failure to thoroughly degauss ferrous parts following the magnetic particle inspection will result in the parts retaining the magnetic properties. Moving parts that take on magnetic properties from an external source may not operate according to their design specifications. Ensure engine parts, such as the impulse coupling body (9), are properly degaussed before assembly.

2. If the impulse coupling body is magnetized, demagnetize it with a degaussing coil.

Procedure continues on next page...

3. Clamp one drive lug of the impulse coupling body (9) in a copper jaw vise with the spring recess side up. Orient the spring (10) with the impulse coupling body (9) for correct rotation (Figure 9-14). On clockwise couplings, the spring must coil in a clockwise direction from the outside toward the center when viewed from the spring recess side of the impulse coupling body. On counterclockwise couplings, the spring must coil in a counterclockwise direction when viewed from spring recess side. Insert the eye of the outer end of the spring (10) in the hole drilled in the inner rim of the impulse coupling body (9).

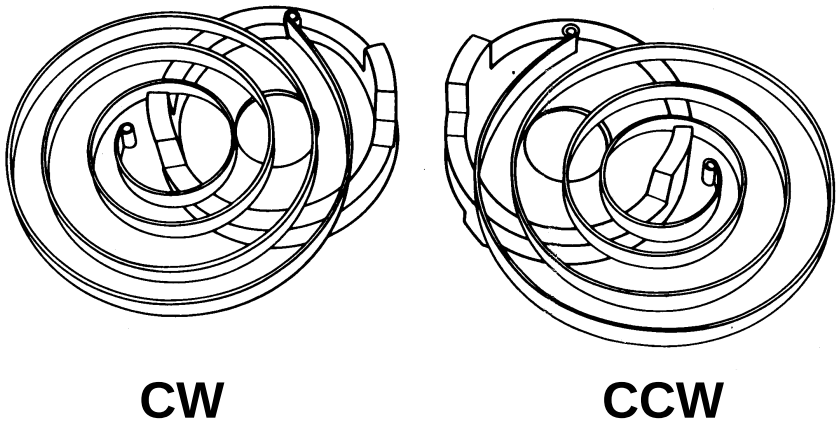

Figure 9-14. Spring Coupling in Body Orientation

WARNING

Nicks or scratches in the spring (10) will cause the spring to break.

4. Using heavy gloves to protect the hands, carefully wind the spring (10) into the body (9), lifting the spring coils one at a time over projections on body; avoid scratching or nicking the spring. After winding spring, brush a light coating of 30 wt. SAE J 1899 aviation engine oil over the spring coils.

5. Using a small screwdriver with all sharp edges removed, pry up one and one half turns at the inner end of the spring and support in position as shown in Figure 9-15. Do not allow the screwdriver to scratch the spring.

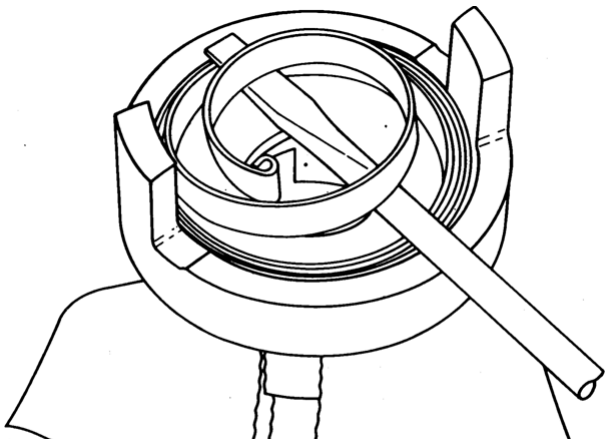

Figure 9-15. Lift Inner End of Spring

6. Engage recess in the hub on the cam assembly (11) with the eye at the inner end of the spring. With the eye engaged, rotate the cam assembly slightly in the direction to unwind spring to permit the cam hub to slip into the inner turn of the spring. Rotate the cam in the opposite direction, winding the spring slightly, until the trip dogs on the edge of the cam (11) clear the projections on body (9). Push the cam assembly down into the body, while removing the screwdriver from the assembly.
7. Insert a spare rotor with woodruff key installed in the tapered portion, into the cam assembly (Figure 9-16). Turn the magnet slightly in the direction of coupling rotation (to wind spring). Carefully lift the cam only enough to clear the trip dogs on the body. Wind the spring one half turn and re-engage the cam assembly into body.

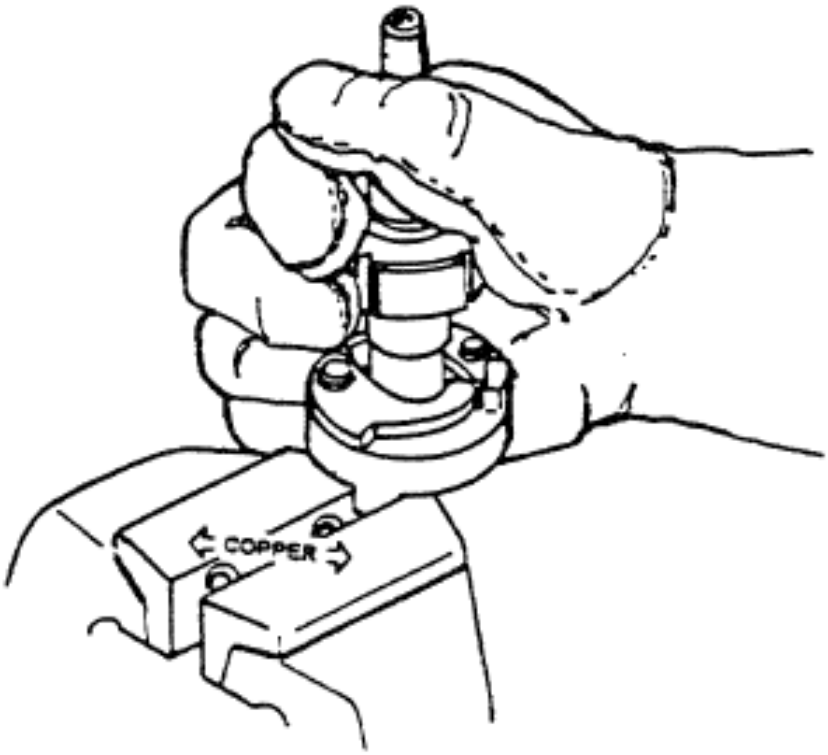

Figure 9-16. Winding Coupling Spring

Procedure continues on next page...

WARNING

Use of unapproved hardware and/or failure to utilize approved lubricants during magneto assembly will produce inaccurate torque values and increased stress on the impulse coupling during assembly.

8. Install a new woodruff key (53) in the tapered portion of the shaft. Apply a light coating of Part No. 646943 anti-seize lubricant to the tapered section of the rotating magnet shaft. (Figure 9-17) to inhibit cam assembly seizure to the shaft and avoid damage during disassembly. Install the impulse coupling assembly (8) and washer (4), with flat side of washer toward the impulse coupling. If applicable, install the drive member woodruff key (53) and bushing (5). Install a new lock washer (3) if used, and thread the nut (2) on to the shaft.
9. Using a calibrated torque wrench, tighten the nut (2) to the minimum torque of 180 in-lbs.

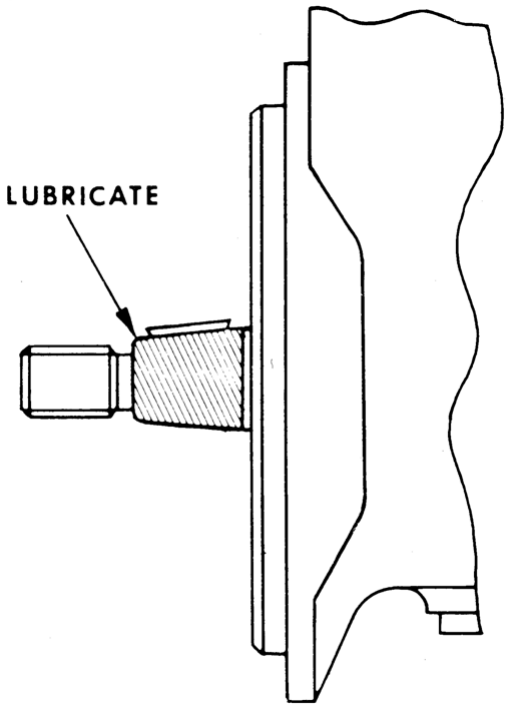

Figure 9-17. Apply Anti-Seize Lubricant to Magneto Shaft

WARNING

Do not exceed 300 in-lbs. torque on the castellated nut. If the nut will not align with the cotter pin holes within the torque specification, replace the nut. Exceeding the torque specification may damage the impulse coupling and require impulse coupling replacement.

10. Install and secure a new cotter pin (7) through the holes in the castellated nut and the magneto shaft. If the slots in the nut do not align with the cotter pin hole, gradually increase fastener torque to align the cotter pin hole with the first available slot in the

castellated nut. Do not exceed 300 in-lbs. torque under any circumstances. After installation, the cotter pin may bent to conform to the shaft or trimmed as shown in Figure 9-18.

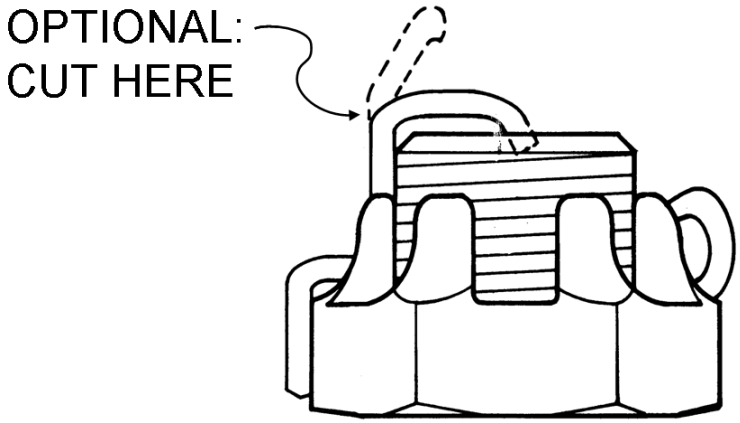

Figure 9-18. Proper Cotter Pin Installation

CAUTION: The impulse coupling may crack (Figure 9-19) during this procedure; if an audible cracking noise, accompanied by immediate reduction in nut torque, remove and replace the cracked impulse coupling assembly.

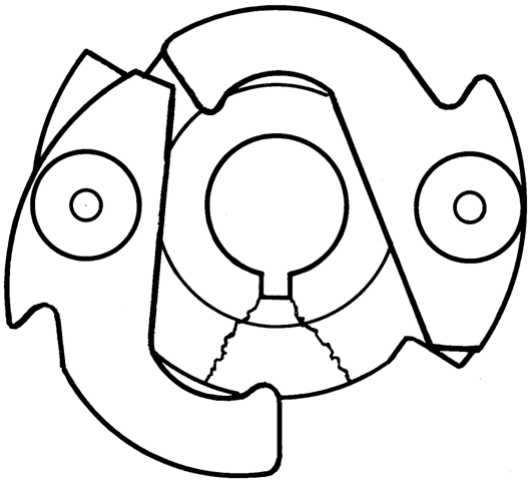

Figure 9-19. Impulse Coupling Cracks

11. Inspect the impulse coupling according to instructions in Section 6-2.2.

9-2.9. Magneto Internal Timing

NOTE: The neutral position is located by “feel” of rotor. As rotor is turned a few degrees backward from where distributor tooth is centered in the inspection hole, the magnet will have a natural tendency to “pull in” and locate in the neutral position.

1. Loosen the drive shaft nut and position the 11-8465 Rotor Holding Tool under the washer or bushing on the drive end of the rotor shaft. Tighten the castellated nut to secure the Rotor Holding Tool on the shaft. Leave the adjusting screw loose to allow the rotating magnet freedom to rotate until further notice.
2. Turn the rotating magnet in the direction of normal rotation until the painted chamfer tooth on the distributor gear is centered in the inspection window, then turn the shaft in the opposite direction of normal rotation until the rotor until the rotor locates the No. 1 neutral position.

   CAUTION: When timing the magneto, do not use any gear holding timing device as hidden gear tooth damage may result.

3. Tighten the adjusting screw (Figure 9-20) of the Rotor Holding Tool to lock the rotor in position.

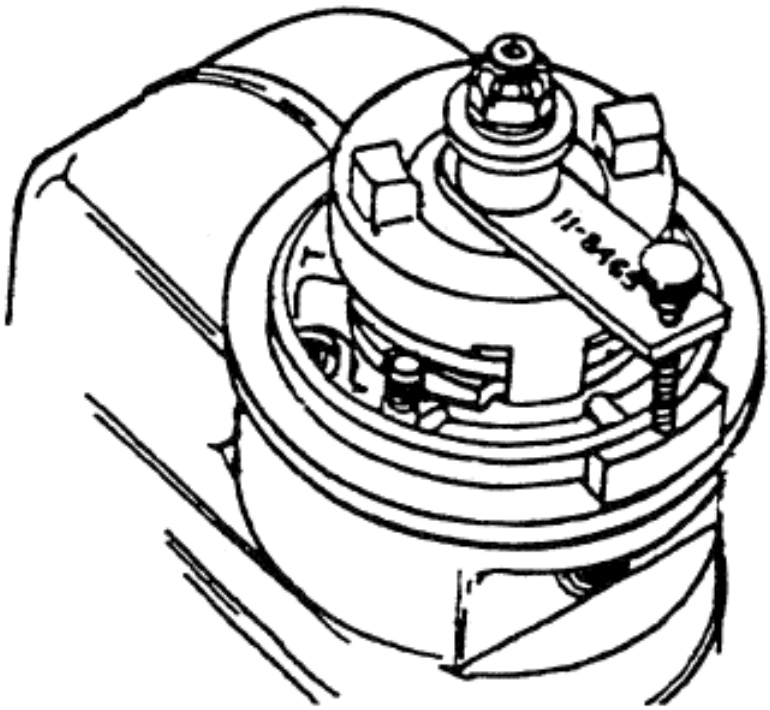

Figure 9-20. 11-8465 Rotor Holding Tool in Position

4. Align the pins of the 11-8693 Timing Plate Assembly (Part of 11-8150-1 Timing Kit) with the screw holes in the flange of the contact assembly compartment (Figure 9-21) and snap the 11-8149 Pointer on the cam securing screw, aligned with the 0° mark on the Timing Plate.

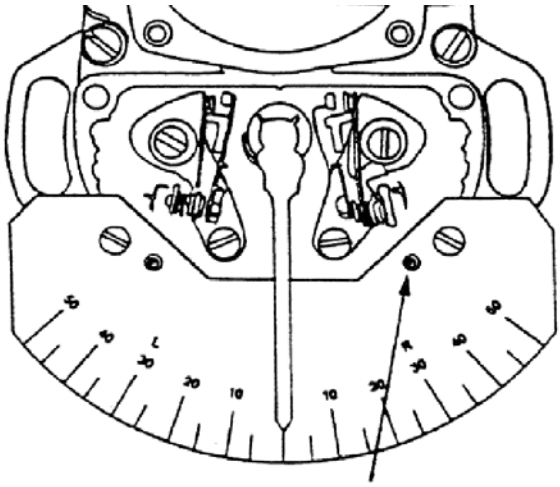

Figure 9-21. Timing Plate Installed on Housing

CAUTION: Tighten adjusting knob of holding tool only enough to hold magnet firmly in desired position. Over tightening may cause damage to drive end bearing.

NOTE: The main contact of a clockwise magneto is located on the left hand side of contact compartment looking into contact compartment. The main contact of a counterclockwise magneto is on the right side of contact compartment.

5. Loosen the adjusting knob of the 11-8465 Rotor Holding Tool and turn the rotor in the normal direction until the pointer indexes with the respective 10° ("E" gap) mark and tighten the adjusting knob of the 11-8465 Rotor Holding Tool. Using the E-50 Timing Light, or equivalent, adjust the main contact points to just open at this position.

6. Loosen rotor holding tool and turn the rotor until the cam follower of the main contact assembly aligns with the highest point of cam lobe. Tighten the of the adjusting knob of the 11-8465 Rotor Holding Tool in this position and measure contact point clearance. Clearance must be 0.018 ± 0.006 inch. If clearance is greater than 0.024 inch, loosen the adjusting screw at the base of the contact assembly and adjust contact clearance to 0.024 inch opening. If clearance is under 0.012 inch, adjust contact to 0.012 inch opening. If contact assembly clearance is required, repeat step 5. Replace the contact assembly if "E" gap is less than 6º or greater than 14º after setting main contact clearance. Tighten the contact assembly screws (41) to 20-25 in-lbs. of torque and verify opening clearance to ensure tightening the screws did not alter contact point clearance.

7. On retard contact assembly magnetos, the retard contact assembly is adjusted to open at a predetermined number of degrees (Table 11-1) after the main contact assembly. The degree of retard for any particular magneto is stamped in the bottom of the contact compartment.

CAUTION: The magneto distributor housing can be used only for retard angle stamped in housing as shown in Figure 2-3. Attempts to alter retard angle by adjusting the retard contact clearance will result in improper magneto operation.

8. Note the number of degrees indicated by the pointer on the scale at the exact point the main contact assembly opens and add the applicable number of degrees retard angle to determine the number of degrees the retard contact assembly should open.
9. Turn the rotor in the normal direction of rotation from the point of main contact opening the exact number of retard degrees and lock the rotor in position with the Rotor Holding Tool adjusting knob. Connect the timing light to the retard contact assembly tab, and adjust the retard contact points to just open at this position.
10. Loosen Rotor Holding Tool adjusting knob and turn the rotor in the normal direction of rotation to check retard contact operation. The retard contact points must open within +2º/-0º of the specified setting. For example, if the main contact opened at 12º, and the retard angle specification is 30º, the retard contact points must open between the 42º and 44º.
11. Continue turning rotor until the retard cam follower is on the high point of cam lobe. Tighten the Rotor Holding Tool adjusting knob and measure retard contact point clearance. Clearance must be 0.018 ± 0.006 inch. If retard contact clearance exceeds 0.024 inch, repeat the timing procedure with “E” gap set at maximum. If retard clearance is less than 0.012 inch, repeat the timing procedure with “E” gap set at minimum “E” gap tolerance is 10º ± 4º. Tighten the contact assembly screws (41) to 20-25 in-lbs. of torque and verify opening clearance to ensure tightening the screws did not alter contact point clearance.
12. If a tachometer contact assembly is used, turn the rotor until the tachometer contact cam follower is on the high point of the cam lobe and secure the rotor with the Rotor Holding Tool adjusting knob. Adjust the tachometer contact to 0.019 ± 0.003 inch clearance. There is no angular timing requirement for the tachometer contact assembly. Tighten the tachometer contact assembly screws (41). For insulated tachometer breaker point screws, apply 8-10 in-lbs. of torque to the screws (41); for uninsulated tachometer breaker point screws, apply 20-25 in-lbs. of torque to the screws (41). Verify opening clearance to ensure tightening the screws did not alter contact point clearance.
13. Inspect the bushing (38) for damage after final torque on the contact assembly screws.
14. Disconnect the E-50 timing light from the magneto.
15. Remove the Timing Kit from the magneto and remove the Rotor Holding Tool from the rotor shaft.

9-2.10. Cover Installation

NOTE: Refer to Figure 9-8 through Figure 9-10 for wire routing in the contact compartment and under the magneto cover.

1. If used, form a new insulation sheet (24) into a loop, and insert in the retard lead recess of the contact cover (15). Place the retard lead assembly (23) in the recess and secure by staking the ears of the spring washer so they wedge against the recess wall. Check the security of the lead assembly in the cover by exerting a pulling force of 3 or 4 pounds on the lead wire; do not pull on the terminal. The spring washer must not shift or slip out of position. For short cover style magnetos, apply 24-26 in-lbs. torque to the retard lead screw (25).
2. If not previously assembled, attach a capacitor lead to the main contacts. Attach any retard or tachometer leads to the retard or tachometer contacts. Install the contact cover (15) and gasket (14), if used, and secure with screws (12) and washers (13). Torque the screws (12) to 20 to 25 in-lbs.

   NOTE: Screen vents located in the cover (15) are unnecessary. These screen vents may be sealed with silicone adhesive or epoxy. For pressurized magnetos only, all vent holes in cover (15) must be sealed on inside surface of cover.

3. Connect adapters assembled from Switch Terminal Kit and Retard Terminal Kit (as necessary) to the magneto and E-50 Timing Light (or equivalent). Confirm operation of the contacts by turning rotor (54) and observing the timing light response.
4. Use a Slaughter Model 1305 AC Hipot Tester set to 500 V to test tachometer circuit for dielectric breakdown to ground. Dielectric breakdown is not permitted - adjust or replace affected parts if the dielectric breakdown test indicates leakage and repeat dielectric breakdown test on the new leads.

9-2.11. Plug Installation

9-2.11.1. Non-Pressurized Magneto Plug Installation

1. Install a ventilator plug (Figure 1) (46) in the lower window of the housing (48).
2. Install a solid plug (44) in the top timing hole of the housing.
3. Torque the plugs (44 & 46) to 10-15 in-lbs.

9-2.11.2. Pressurized Magneto Plug Installation

1. Install an air inlet bushing (Figure 1) (44a) in the top timing hole of the housing.
2. Install a calibrated orifice (46a) in the bottom hole of the housing
3. Tighten the plugs to 60-80 in-lbs.

9-2.12. Data Plate Installation

1. Type applicable magneto data on the new data plate. Apply a protective coating of clear enamel to the label and allow to dry.
2. Clean data plate attachment surface of housing (Figure 1) (50) by wiping with cloth moistened with isopropyl alcohol. Apply Permabond 910 Adhesive to the back side of the data plate.
3. Align the data plate (52) with the housing (50) and apply firm pressure across entire surface of the label.

9-2.13. Final Assembly

1. If necessary, remove the front end hardware to install the engine drive gear. Assemble the bushing (5), washers (3 & 4), drive member (6 & 7) and nut (2) on the shaft.

WARNING

Do not exceed 300 in-lbs. torque on the castellated nut. If the nut will not align with the cotter pin holes within the torque specification, replace the nut. Exceeding the torque specification may damage the impulse coupling and require impulse coupling replacement.

2. Install a new lock washer (3) if used, and thread the nut (2) on to the shaft; tighten the nut (1) to 180 in-lbs. with a calibrated torque wrench.
3. Install and secure a new cotter pin (1) as shown in Figure 9-18. If the slots in the nut do not align with the cotter pin hole, gradually increase fastener torque to align the cotter pin hole with the first available slot in the castellated nut. Do not exceed 300 in-lbs. torque under any circumstances.

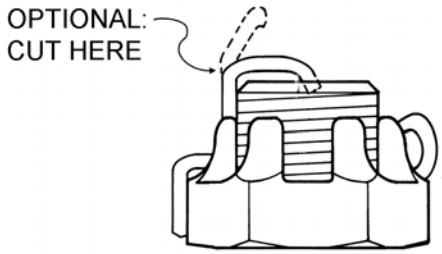

Figure 9-18 Repeated for Reference

CAUTION: If the impulse coupling cam cracks (Figure 9-19) during this procedure, an audible cracking noise is evident and nut torque reduces immediately. If the cam cracks, replace it with a new cam.

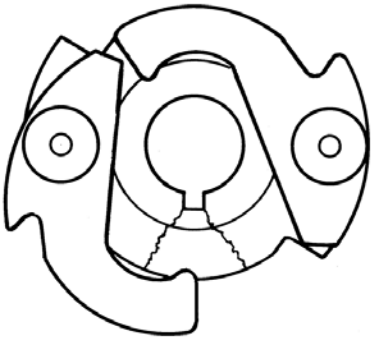

Figure 9-19 Repeated for Reference

9-2.14. Post-Overhaul Test

Perform the applicable “Post Overhaul Testing” according to instructions in Section 3-2.

9-3. Magneto Installation on Engine

NOTE: Comply with all engine manufacturer's installation instructions and parts lists regarding drive adapters, spacers, gaskets, mounting hardware, torque values and related specifications.

WARNING

When the P-lead terminal is removed from the magneto, the spring inside the magneto may not ground the magneto. Should the propeller be moved by hand during maintenance procedures and a functional ("hot") magneto condition exists, the engine may fire and cause injury to personnel!

1. Remove the plug (Figure 1) (44) to gain visual access to the distributor gear (72). Turn rotating magnet until the red tooth on the gear is approximately centered in the timing window of the magneto housing (48) to position the rotating magnet at the approximate No. 1 cylinder firing position. Turn the rotor slightly in the reverse direction of normal rotation and allow rotor to rest in magnetic neutral position. The red tooth will appear off center in window.

2. Using an E-50 Timing Light and adapters made from applicable (See Table 11-1) terminal kits, install and adjust magneto to engine timing according to the engine manufacturer's instructions.

WARNING

Do not use any gear holding tool while performing magneto inspections, maintenance, adjustments or assembly. Such tools are unnecessary and using them may cause hidden damage to the distributor gear, resulting in magneto failure and subsequent engine failure, personal injury or death.

3. Assemble Terminal Kits for each magneto as shown in Figure 9-22 or Figure 9-23, as required. Install the switch and applicable retard and/or tachometer wiring by securing terminal nut(s) to the magneto terminals. Tighten terminals finger tight.

4. Dress spark plug leads to the engine in accordance with engine manufacturer's instructions. Dress leads away from sharp edges and hot spots. When clamps are tightened, ensure leads will not be crushed. Leads must be supported at short intervals to prevent chafing damage, and not drawn so taut as to produce strain on the parts.

5. Apply MS-122AD dry teflon spray to the harness grommets and install the harness outlet plate, with a gasket (P/N 10-357520) for pressurized magnetos, on the magneto and tighten the harness outlet plate evenly to the magneto. Torque the outlet plate screws evenly to 12-15 in-lbs.

6. Install the switch and retard (if used) wiring by securing the terminal nut(s) to the magneto. Torque the nuts on the switch and retard terminal to 15-17 in-lbs. Tighten other P-lead terminals finger tight.

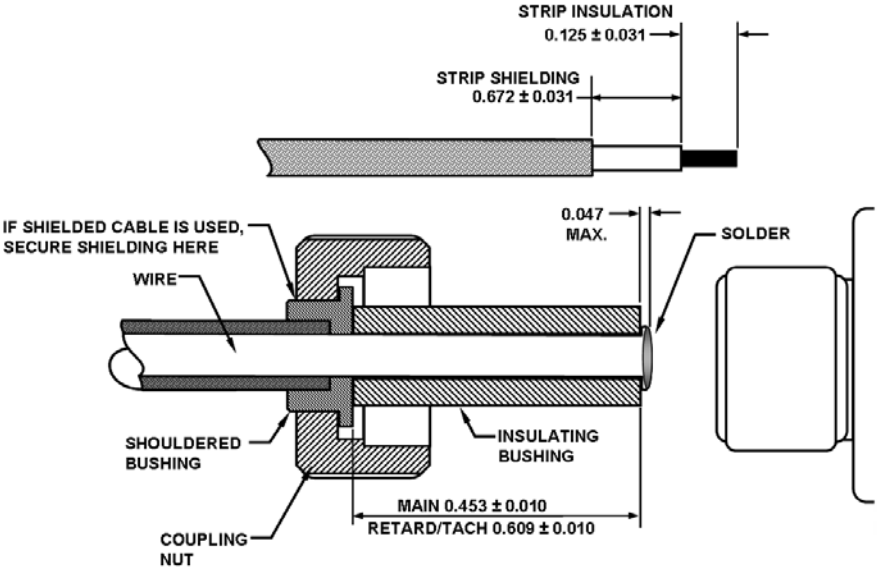

Figure 9-22. Terminal Assembly Kit:
10-157208, 10-157209, 10-382813, 10-382814

7. For pressurized magnetos, remove and discard the plug (44) (supplied for shipping purposes). Install an air inlet fitting into magneto housing (48) timing window according to the engine manufacturer's instructions. Ensure the air inlet fitting does not interfere with internal magneto parts.

8. Attach the tachometer fittings to the magneto according to the manufacturer's instructions. If the hole adjacent to the rotating magnet (54) in magneto housing (50) will be used for a tachometer pick-up in an unpressurized magneto, install a ventilator plug, (46) in the distributor housing (48) timing window and discard the solid plug (44).

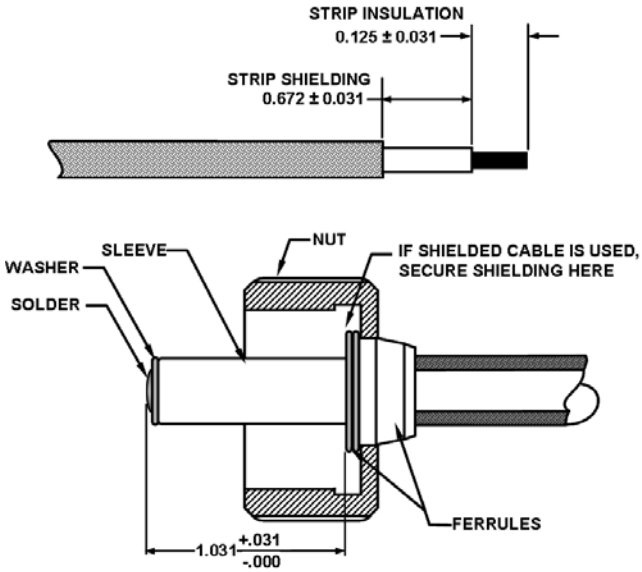

Figure 9-23. Terminal Assembly Kit:
10-52305 or 10-52305-1

Intentionally Left Blank

Section 10.Special Tools, Equipment and Supplies

Refer to Table 10-1 for a list of special tools, fixtures, equipment and consumable supplies. Figure 10-1 provides fabrication instructions for a fixture required for magneto service. All linear dimensions are in inches, unless specified otherwise.

NOTE: Tools specified in this manual are listed for the convenience of users wishing to purchase tools. At the time of publication, each tool listed is available from the corresponding supplier. Use of alternate tools is acceptable, as long as such tools are capable of equal or greater performance than the listed tool.

10-1. Special Tool and Consumable Supply List

Table 10-1. Special Tools and Consumable Supplies

Part Number and Description	Application	Source
Special Tools		
11-6924-1 Pressing Tool	To install press fit parts	Kell-Strom
11-8150-1 Timing Kit	Check magneto internal timing	Kell-Strom
11-8465 Rotor Holding Tool	Hold rotor to check magneto internal timing	Kell-Strom
11-8627 Spring Seating Kit	Seat tower springs (80) in distributor block (79)	Kell-Strom
11-10192 Removal Tool	Remove bearing inner race (70) from rotor (54)	Kell-Strom
11-10500 Magneto Test Stand, or equivalent	For off-engine magneto testing	Kell-Strom
11-10600 Magnet Charger	Magnetize rotor (54)	Kell-Strom
11-10090 Air Flow Tester	Test magneto pressurization system	Kell-Strom
1305 AC Hipot Tester	Tachometer lead dielectric breakdown test	Slaughter
8840A Digital Multimeter (or equivalent)	Test coil	Fluke; Commercial, off the shelf
CG240 Puller	Remove drive plate or cam	Snap-On
CG40-8 Collet	Remove bearing outer race (64) from housing (48). Used with CG40-4 Expanding Rod	Snap-On
CG40-4 Expanding Rod	Remove bearing outer race (64) from housing (48). Used with CG40-8 Collet	Snap-On
E-5 High Voltage Cable Tester	Test high tension lead insulation strength and continuity	Eastern Technology Corp.
E-50 Timing Light (or equivalent)	Check magneto-to-engine timing	Eastern Technology Corp.
LC-103 Capacitor Tester	Test capacitor	Sencore
No. 2 Retaining ring pliers	Remove and install retaining ring	Waldes Truarc
Consumable Supplies		
10-400550-1 Magneto Grease	Pack berarings	Continental
10-391200 Distributor Block Lubricant	Distributor block bushings	Continental
10-391400 Distributor Block Coating	Apply to “Black” distributor blocks to inhibit moisture sheeting on dielectric	Continental
MS-122AD Teflon Dry Lubricant	Lubricate distributor gear teeth	Miller-Stephenson
10-70506-10S Protective Caps (2 required)	Protect bushing during coating of block	Continental
10-76257, Contact	Contact	Continental
10-86527 High Temperature Lubricant	Contact assemblies, cam follower felt	Continental
646943, Anti-seize Lubricant	Prevent drive menbers from locking on rotating magnet shaft taper	Continental
Dykem Stain Red DNC	Mark distributor gears	Dykem
Permabond 910 Industrial Grade Adhesive	Bond Data Plate to Housing	Permabond

Table 10-2. Supplier Contact Information

Company	Address	Telephone	Internet site
Dykem	ITW Dykem 805 E. Old 56 Highway Olathe, KS 66061	800-443-9536	buydykem.com
Eastern Technology Corporation	42 nelson St. East hartford, CT	860-528-9821	easterntech.com
Emhart Fastening Teknologies	Industrial Division 50 Shelton Technology Center P.O. Box 859 Shelton, CT 06484	203-924-9341	emhart.com/products
Kell Strom Tool Company	214 Church Street Wethersfield, CT 06109	860-529-6851 800-851-6851	kell-strom.com
Loctite	1201 Trout Brook Crossing Rocky Hill, CT 06067	800-567-8483	henkelna.com
Miller-Stephenson Chemical Company	6348 Oakton St. Morton Grove, IL 60053	847-966-2022 800-992-2424	miller-stephenson.com
Permabond International	Englewood, NJ 07631	732-868-1372 800-714-0170	permabond.com
Sencore	3200 Sencore Drive Sioux Falls, SD 57107	800-736-2673	sencore.com
Snap-On Tools	2611 Commerce Blvd. Birmingham, AL	877-762-7664(US) 888-451-8665 (CAN) 01536 413877 (UK) 1800 811 480 (AU)	snap-on.com
Slaughter	28105 N Keith Drive Lake Forest, IL 60045	847-932-3665 800-504-0055	hipot.com
Thomas & Betts	8155 T&B Boulevard Memphis, TN 38125	901-252-8000 800-816-7809	tnb.com
Waldes TruArc Division	Waldes Truarc Lon Island City, NY 11101	908-859-4266 800-526-7055	truarc.com

10-2. Illustrated Special Tools and Fixtures

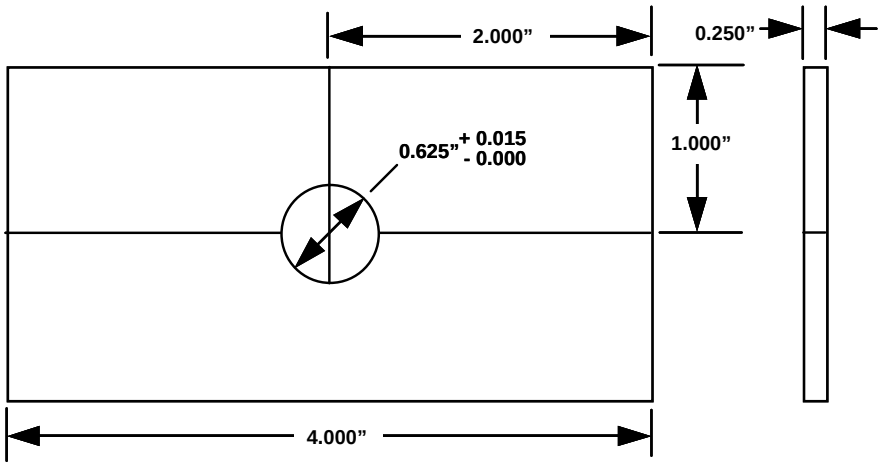

Figure 10-1. Small Gear Support Bar Dimensions

Section 11. Illustrated Parts List

11-1. Equipment Covered

Table 11-1. Equipment Covered

Magneto Part Number	Model Number	Degrees Lag/Retard	Use Terminal Kit Part No.	Applicable Parts List
10-51360-26	S4LN-21	25	10-52305	Table 11-3
10-51360-27	S4RN-20	--	10-52305	Table 11-3
10-51360-28	S4RN-21	25	10-52305	Table 11-3
10-51360-29	S4LN-20	--	10-52305	Table 11-3
10-51360-37	S4LN-21	25	10-52305	Table 11-3
10-51360-40	S4RN-20	--	10-52305	Table 11-3
10-51360-41	S4RN-21	25	10-52305	Table 11-3
10-51360-45[1]	S4LN-21	25	10-157209	Table 11-3
10-51360-46	S4RN-21	25	10-52305	Table 11-3
10-51360-47[1]	S4LN-21	25	10-157209	Table 11-3
10-51360-54	S4LN-21	15	10-52305	Table 11-3
10-51360-58[1]	S4LN-21	15	10-157209	Table 11-3
10-51365-9	S6LN-21	45	10-52305	Table 11-4
10-51365-32	S6LN-21	45	10-52305	Table 11-4
10-51365-32	S6LN-21	45	10-52305	Table 11-4
10-51365-33	S6LN-20	--	10-52305	Table 11-4
10-51365-34	S6RN-21	35	10-52305	Table 11-4
10-51365-35	S6RN-21	45	10-52305	Table 11-4
10-51365-39	S6LN-21	45	10-52305	Table 11-4
10-51365-40	S6RN-21	35	10-52305	Table 11-4
10-51365-43	S6LN-21	45	10-52305	Table 11-4
10-51365-44	S6LN-20	--	10-52305	Table 11-4
10-51365-45[1]	S6LN-21	35	10-52305	Table 11-4
10-51365-46	S6LN-20	--	10-52305	Table 11-4
10-51365-47	S6LN-21	45	10-52305	Table 11-4
10-51365-48	S6RN-21	35	10-52305	Table 11-4
10-51365-54	S6RN-21	35	10-52305	Table 11-4
10-51365-57[1]	S6LN-21	45	10-157209	Table 11-4
10-52350-20	S6LN-23	45	NLA[2]	Table 11-4
10-79020-6	S6LN-25	30	10-52305	Table 11-5
10-79020-10	S6RN-25	30	10-52305	Table 11-5
10-79020-11[1]	S6LN-25	30	10-157209	Table 11-5
10-79020-16	S6LN-25	30	10-52305	Table 11-5
10-79020-17[1]	S6LN-25	30	10-157209	Table 11-5
10-79020-18[1]	S6LN-25	30	10-157209	Table 11-5
10-79020-19[1]	S6RN-25	30	10-157209	Table 11-5
10-79020-118[1]	S6LN-25P	30	10-382814	Table 11-5

Table 11-1. Equipment Covered

Magneto Part Number	Model Number	Degrees Lag/Retard	Use Terminal Kit Part No.	Applicable Parts List
10-79020-119[1]	S6RN-25P	30	10-382814	Table 11-5
10-163005-2[1]	S4LN-200	25	10-157208 & 10-157209	Table 11-6
10-163005-3[1]	S4LN-200	25	10-157208 & 10-157209	Table 11-6
10-163005-11	S4LN-200	15	10-157208 & 10-157209	Table 11-6
10-163010-1[1]	S6RN-200	30	10-157208 & 10-157209	Table 11-7
10-163010-2[1]	S6LN-200	30	10-157208 & 10-157209	Table 11-7
10-163010-10[1]	S6LN-200	37.5	10-157208 & 10-157209	Table 11-7
10-163010-11[1]	S6LN-200	30	10-157208 & 10-175209	Table 11-7
10-163010-15[1]	S6RN-200	25	10-157208 & 10-157209	Table 11-7
10-163015-3[1]	S4RN-201	20	10-157208 & 10-157209	Table 11-6
10-163020-3[1]	S6RN-201	30	10-157208 & 10-157209	Table 11-7
10-163020-4[1]	S6LN-201	30	10-157208 & 10-157209	Table 11-7
10-163045-1[1]	S4LN-204	--	10-157209	Table 11-6
10-163045-3[1]	S4LN-204	--	10-157209	Table 11-6
10-163045-6[1]	S4LN-204	00	10-157209	Table 11-6
10-163050-1[1]	S6LN-204	--	10-157209	Table 11-7
10-163050-2[1]	S6LN-204	--	10-157209	Table 11-7
10-163050-7[1]	S6RN-204	11	10-157209	Table 11-7
10-163050-9[1]	S6LN-204	11	10-157209	Table 11-7
10-163050-12[1]	S6LN-204	11	10-157209	Table 11-7
10-163055-1[1]	S4RN-205	11	10-157209	Table 11-6
10-163060-1[1]	S6RN-205	11	10-157209	Table 11-7
10-163060-2[1]	S6LN-205	11	10-157209	Table 11-7
10-500514-1	S4LSC-21	25	--	Table 11-8
10-500514-2	S4LSC-21	15	--	Table 11-8
10-500514-3	S4RSC-21	25	--	Table 11-8
10-500514-4	S4RSC-21	25	--	Table 11-8
10-500514-5	S4RSC-21	25	--	Table 11-8
10-500514-8	S4LSC--21	25		Table 11-8
10-500514-201	S4LSC-21T	25	--	Table 11-8
10-500516-2	S6LSC-21	45	--	Table 11-8
10-500516-3	S6LSC-21	45	--	Table 11-8
10-500516-4	S6LSC-21	45	--	Table 11-8
10-500516-5	S6RSC-21	35	--	Table 11-8
10-500516-6	S6RSC-21	45	--	Table 11-8
10-500516-7	S6RSC-21	45	--	Table 11-8
10-500516-9	S6RSC-21	35	--	Table 11-8
10-500516-10	S6LSC-21	45	--	Table 11-8

Table 11-1. Equipment Covered

Magneto Part Number	Model Number	Degrees Lag/Retard	Use Terminal Kit Part No.	Applicable Parts List
10-500556-1	S6RSC-25	30	--	Table 11-8
10-500556-3	S6LSC-25	30	--	Table 11-8
10-500556-101	S6RSC-25P	30	--	Table 11-8
10-500556-103	S6LSC-25P	30	--	Table 11-8
10-500556-203	S6LSC-25T	30	--	Table 11-8
10-500556-901	SRSC-25P	30	--	Table 11-8
10-600604-1	S4RSC-201	20	--	Table 11-7
10-600606-1	S6RSC-201	30	--	Table 11-9
10-600606-3	S6LSC-201	30	--	Table 11-9
10-600614-1	S4LSC-200	25	--	Table 11-7
10-600614-2	S4LSC-200	15	--	Table 11-7
10-600614-3	S4LSC-200	25	--	Table 11-7
10-600616-3	S6LSC-200	37.5	--	Table 11-9
10-600616-4	S6RSC-200	30	--	Table 11-9
10-600616-5	S6LSC-200	30	--	Table 11-9
10-600616-6	S6LSC-200	30	--	Table 11-9
10-600616-7	S6RSC-200	25	--	Table 11-9
10-600616-9	S6LSC-200	30	--	Table 11-9
10-600616-101	S6LSC-200P	30	--	Table 11-9
10-600644-1	S4LSC-204	--	--	Table 11-7
10-600644-3	S4RSC-204	--	--	Table 11-7
10-600644-4	S4LSC-204	--	--	Table 11-7
10-600644-5	S4RSC-204	--	--	Table 11-7
10-600644-201	S4LSC-204T	--	--	Table 11-7
10-600644-202	S4LSC-204T	--	--	Table 11-7
10-600646-1	S6LSC-204	--	--	Table 11-9
10-600646-2	S6LSC-204	--	--	Table 11-9
10-600646-3	S6LSC-204	--	--	Table 11-9
10-600646-4	S6RSC-204	--	--	Table 11-9
10-600646-101	S6LSC-204P	--	--	Table 11-9
10-600646-201	S6LSC-204T	--	--	Table 11-9
10-600654-1	S4RSC-205	--	--	Table 11-7
10-600656-1	S6RSC-205	--	--	Table 11-9
10-600656-3	S6LSC-205	--	--	Table 11-9

1. Indicated magnetos are eligible for update to short cover configuration. Kit part applicability and contents are contained in REFERENCE. Assembly instructions are covered in Section 9.
2. NLA - No Longer Available. The part number of the original component or assembly is no longer available. Should a part identified as “NLA” require replacement, modify the assembly, as noted herein, to convert the assembly to meet the current specification of the approved replacement assembly.

11-2. Superseded, Discontinued and Interchangeable Magnetos

Table 11-2. Superseded, Discontinued and Interchangeable Magnetos

Old Part No.	For Maintenance or Overhaul, Follow Parts List For	For Replacement, Use			
		Part No.	Type No.	Part No.	Type No.
10-51360-1	10-51360-26	10-51360-37	S4LN-21	10-500514-1	S4LSC-21
10-51360-3	10-51360-29	10-51360-29	S4LN-20	10-600644-1	S4LSC-204
10-51360-4	10-51360-27	10-51360-27	S4RN-20	10-600644-3	S4RSC-204
10-51360-6	10-51360-28	10-51360-28	S4RN-21	10-500514-3	S4RSC-21
10-51360-8	10-51360-37	10-51360-37	S4LN-21	10-500514-1	S4LSC-21
10-51360-10	10-51360-37	10-51360-37	S4LN-21	10-500514-1	S4LSC-21
10-51360-11	10-51360-29	10-51360-29	S4LN-20	10-600644-1	S4LSC-204
10-51360-12	10-51360-37	10-51360-37	S4LN-21	10-500514-1	S4LSC-21
10-51360-23	10-51360-29	10-51360-29	S4LN-20	10-600644-1	S4LSC-204
10-51360-24	10-51360-37	10-51360-37	S4LN-21	10-500514-1	S4LSC-21
10-51360-25	10-51360-37	10-51360-37	S4LN-21	10-500514-1	S4LSC-21
10-51360-26	10-51360-26	10-51360-37	S4LN-21	10-500514-1	S4LSC-21
10-51360-27	10-51360-27	10-51360-27	S4RN-20	10-600644-3	S4RSC-204
10-51360-28	10-51360-28	10-51360-28	S4RN-21	10-500514-3	S4RSC-21
10-51360-29	10-51360-29	10-51360-29	S4LN-20	10-600644-1	S4LSC-204
10-51360-30	10-51360-37	10-51360-37	S4LN-21	10-500514-1	S4LSC-21
10-51360-31	10-51360-37	10-51360-37	S4LN-21	10-500514-1	S4LSC-21
10-51360-33	10-51360-37	10-51360-37	S4LN-21	10-500514-1	S4LSC-21
10-51360-37	10-51360-37	10-51360-37	S4LN-21	10-500514-1	S4LSC-21
10-51360-40	10-51360-40	10-51360-40	S4RN-20	10-600644-5	S4RSC-204
10-51360-41	10-51360-41	10-51360-41	S4RN-21	10-500514-5	S4RSC-21
10-51360-45	10-51360-45	10-51360-45	S4LN-21	10-500514-1	S4LSC-21
10-51360-46	10-51360-46	10-51360-46	S4RN-21	10-500514-4	S4RSC-21
10-51360-47	10-51360-47	10-51360-47	S4LN-21	10-500514-201	S4LSC-21T
10-51360-48	Discontinued	--		--	
10-51360-53	Discontinued	--		--	
10-51360-54	10-51360-54	10-51360-54	S4LN-21	10-500514-2	S4LSC-21
10-51360-55	10-51360-58	10-51360-58	S4LN-21	10-500514-2	S4LSC-21
10-51360-58	10-51360-58	10-51360-58	S4LN-21	10-500514-2	S4LSC-21
10-51365-1	10-51365-39	10-51365-39	S6LN-21	10-500516-4	S6LSC-21
10-51365-2	10-51365-40	10-51365-54	S6RN-21	10-500516-7	S6RSC-21
10-51365-5	Discontinued	--	--	--	--
10-51365-7	10-51365-48	10-51365-48	S6RN-21	10-500516-9	S6RSC-21
10-51365-9[1]	10-51365-9	10-51365-9	S6LN-21	10-500516-10	S6LSC-21
10-51365-13	10-51365-40	10-51365-54	S6RN-21	10-500516-7	S6RSC-21
10-51365-14	10-51365-48	10-51365-48	S6RN-21	10-500516-9	S6RSC-21
10-51365-15	10-51365-33	10-51365-33	S6LN-20	10-600646-2	S6LSC-204
10-51365-16	Discontinued	--	--	--	--
10-51365-17	10-51365-43	10-51365-43	S6LN-21	10-500516-3	S6LSC-21
10-51365-20	10-51365-32	10-51365-32	S6LN-21	10-500516-3	S6LSC-21

Table 11-2. Superseded, Discontinued and Interchangeable Magnetos

Old Part No.	For Maintenance or Overhaul, Follow Parts List For	For Replacement, Use			
		Part No.	Type No.	Part No.	Type No.
10-51365-25	10-51365-33	10-51365-33	S6LN-20	10-600646-2	S6LSC-204
10-51365-26	10-51365-34	10-51365-34	S6RN-21	10-500516-5	S6RSC-21
10-51365-27	10-51365-46	10-51365-46	S6LN-20	10-600646-1	S6LSC-204
10-51365-28	10-51365-47	10-51365-47	S6LN-21	10-500516-2	S6LSC-21
10-51365-29	10-51365-44	10-51365-44[2]	S6LN-20	Discontinued	--
10-51365-30	10-51365-45	10-51364-45[2]	S6LN-21	Discontinued	--
10-51365-31	10-51365-33	10-51365-33	S6LN-20	10-600646-2	S6LSC-204
10-51365-32	10-51365-32	10-51365-32	S6LN-21	10-500516-3	S6LSC-21
10-51365-33	10-51365-33	10-51365-33	S6LN-20	10-600646-2	S6LSC-204
10-51365-34	10-51365-34	10-51365-34	S6RN-21	10-500516-5	S6RSC-21
10-51365-35	10-51365-35	10-51365-35	S6RN-21	10-500516-6	S6RSC-21
10-51365-39	10-51365-39	10-51365-39	S6LN-21	10-500516-4	S6LSC-21
10-51365-40	10-51365-40	10-51365-54	S6RN-21	10-500516-7	S6RSC-21
10-51365-41	Discontinued	--	--	--	--
10-51365-42	Discontinued	--	--	--	--
10-51365-43	10-51365-43	10-51365-43	S6LN-21	10-500516-3	S6LSC-
10-51365-44	10-51365-44	10-51365-44[2]	S6LN-20	--	--
10-51365-45	10-51365-45	10-51365-45[2]	S6LN-21	--	--
10-51365-46	10-51365-46	10-51365-46	S6LN-20	10-600646-1	S6LSC-204
10-51365-47	10-51365-47	10-51365-47	S6LN-21	10-50051602	S6LSC-21
10-51365-48	10-51365-48	10-51365-48	S6RN-21	10-500516-9	S6RSC-21
10-51365-53	Discontinued	--	-	--	--
10-51365-54	10-51365-54	10-51365-54	S6RN-21	10-500516-7	S6RSC-21
10-51365-57	10-51365-57	10-51365-57	S6LN-21	10-500516-2	S6LSC-21
10-52350-1	Discontinued	--	--	--	--
10-52350-2	10-51365-48[3]	10-51365-48	S6RN-21	10-500516-9	S6RSC-21
10-52350-6	10-52350-20	10-51365-43[3]	S6LN-21	10-500516-3	S6LSC-21
10-52350-7	Discontinued	--	--	--	--
10-52350-8	Discontinued	--	--	--	--
10-52350-14	10-51365-33[3]	10-51365-33	S6LN-20	10-600646-2	S6LSC-204
10-52350-15	10-51365-34[3]	10-51365-34	S6RN-21	10-500516-5	S6RSC-21
10-52350-17	10-51365-33	10-51365-33	S6LN-20	10-600646-2	S6LSC-204
10-52350-18	10-51365-34[3]	10-51365-34	S6RN-21	10-500516-5	S6RSC-21
10-52350-19	10-51365-48[3]	10-51365-48	S6RN-21	10-500516-9	S6RSC-21
10-52350-20	10-52350-20	10-51365-43[3]	S6LN-21	10-500516-3	S6LSC-21
10-52350-21	Discontinued	--	--	--	--
10-52350-22	10-51365-33[3]	10-51365-33	S6LN-20	10-600646-2	S6LSC-204
10-52350-23	10-51365-34[3]	10-51365-34	S6RN-21	10-500516-5	S6RSC-21
10-52350-24	Discontinued	--	--	--	--
10-52350-25	Discontinued	--	--	--	--

Table 11-2. Superseded, Discontinued and Interchangeable Magnetos

Old Part No.	For Maintenance or Overhaul, Follow Parts List For	For Replacement, Use			
		Part No.	Type No.	Part No.	Type No.
10-79020-2	10-79020-10[4]	10-79020-10	S6RN-25	10-500556-1	S6RSC-25
10-79020-5	10-79020-10[4]	10-79020-10	S6RN-25	10-500556-1	S6RSC-25
10-79020-6	10-79020-6	10-79020-6	S6LN-25	10-500556-3	S6LSC-25
10-79020-8	10-79020-10[4]	10-79020-10	S6RN-25	10-500556-1	S6RSC-25
10-79020-10	10-79020-10	10-79020-10	S6RN-25	10-500556-1	S6RSC-25
10-79020-11	10-79020-11	10-79020-11	S6LN-25	10-500556-203	S6LSC-25T
10-79020-13	Discontinued	--	--	--	--
10-79020-14	Discontinued	--	--	--	--
10-79020-16	10-79020-16	10-79020-16	S6LN-25	10-500556-3	S6LSC-25
10-79020-17	10-79020-17	10-79020-17	S6LN-25	10-500556-203	S6LSC-25T
10-79020-18	10-79020-18	10-79020-18	S6LN-25	10-500556-3	S6LSC-25
10-79020-19	10-79020-19	10-79020-19	S6RN-25	10-500556-1	S6RSC-25
10-79020-118	10-79020-118	10-79020-118	S6LN-25P	10-500556-103	S6LSC-25P
10-79020-119	10-79020-119	10-79020-119	S6RN-25P	10-500556-101	1S6RSC-25P
10-85290-2	Discontinued	--	--	--	--
10-85290-3	Discontinued	--	--	--	--
10-163005-1	10-163005-2	10-163005-2	S4LN-200	10-600614-1	S4LSC-200
10-163005-2	10-163005-2	10-163005-2	S4LN-200	10-600614-1	S4LSC-200
10-163005-3	10-163005-3	10-163005-3	S4LN-200	10-600614-3	S4LSC-200
10-163005-4	Discontinued	--	--	--	--
10-163005-5	Discontinued	--	--	--	--
10-163005-7	Discontinued	--	--	--	--
10-163005-10	Discontinued	--	--	--	--
10-163005-11	10-163005-11	10-163005-11	S4LN-200	10-600614-2	S4LSC-200
10-163010-1	10-163010-1	10-163010-1	S6RN-200	10-600616-4	S6RSC-200
10-163010-2	10-163010-2	10-163010-2	S6LN-200	10-600616-5	S6LSC-200
10-163010-3	Discontinued	--	--	--	--
10-163010-4	Discontinued	--	--	--	--
10-163010-5	Discontinued	--	--	--	--
10-163010-6	Discontinued	--	--	--	--
10-163010-7	Discontinued	--	--	--	--
10-163010-8	Discontinued	--	--	--	--
10-163010-9	10-600616-9	10-600616-9	--	10-600616-9	S6LSC-200
10-163010-10	10-163010-10	10-163010-10	S6LN-200	10-600616-3	S6LSC-200
10-163010-11	10-163010-11	10-163010-11	S6LN-200	10-600616-6	S6LSC-200
10-163010-15	10-163010-15	10-163010-15	S6RN-200	10-600616-7	S6RSC-200
10-163010-17	Discontinued	--	--	--	--
10-163015-1	Discontinued	--	--	--	--
10-163015-2	Discontinued	--	--	--	--
10-163015-3	10-163015-3	10-163015-3	S4RN-201	10-600604-1	S4RSC-201
10-163015-4	Discontinued	--	--	--	--
10-163020-1	Discontinued	10-163020-3	S6RN-201	10-600606-1	S6RSC-201

Table 11-2. Superseded, Discontinued and Interchangeable Magnetos

Old Part No.	For Maintenance or Overhaul, Follow Parts List For	For Replacement, Use			
		Part No.	Type No.	Part No.	Type No.
10-163020-2	Discontinued	--	--	--	--
10-163020-3	10-163020-3	10-163020-3	S6RN-201	10-600606-1	S6RSC-201
10-163020-4	10-163020-4	10-163020-4	S6LN-201	10-600606-3	S6LSC-201
10-163020-103[5]	Discontinued	--	--	--	--
10-163030-1	Discontinued	--	--	--	--
10-163030-4	Discontinued	--	--	--	--
10-163045-1	10-163045-1	10-163045-1	S4LN-204	10-600644-4	S4LSC-204
10-163045-2	Discontinued	--	--	--	--
10-163045-3	10-163045-3	10-163045-3	S4LN-204	10-600644-1	S4LSC-204
10-163045-4	Discontinued	--	--	-	--
10-163045-6	10-163045-6	10-163045-6	S4LN-204	10-600644-201	S4LSC-204T
10-163045-7	Discontinued	--	--	--	--
10-163045-8	10-163045-3	10-163045-3	S4LN-204	10-600644-1	S4LSC-204
10-163050-1	10-163050-1	10-163050-1	S6LN-204	10-600646-2	S6LSC-204
10-163050-2	10-163050-2	10-163050-2	S6LN-204	10-600646-3	S6LSC-204
10-163050-3	Discontinued	--	--	--	--
10-163050-4	10-163050-9	10-163050-9	S6LN-204	10-600646-1	S6LSC-204
10-163050-5	Discontinued	--	--	--	--
10-163050-6	Discontinued	--	--	--	--
10-163050-7	10-163050-7	10-163050-7	S6RN-204	10-600646-4	S6RSC-204
10-163050-8	Discontinued	--	--	--	--
10-163050-9	10-163050-9	10-163050-9	S6LN-204	10-600646-1	S6LSC-204
10-163050-12	10-163050-12	10-163050-12	S6LN-204	10-600646-201	S6LSC-204T
10-163055-1	10-163055-1	10-163055-1	S4RN-205	10-600654-1	S4RC-205
10-163055-2	Discontinued	--	--	--	--
10-163060-1	10-163060-1	10-163060-1	S6RN-205	10-600656-1	S6RSC-205
10-163060-2	10-163060-2	10-163060-2	S6LN-205	10-600656-3	S6LSC-205
10-163060-101[5]	Discontinued	--	--	--	--
10-163070-1	Discontinued	--	--	--	--
10-163070-3	Discontinued	--	--	--	--

1. Use Part No. 10-51365-9 or P/N 10-500516-10 Magnetos on engines not converted per Continental Service Bulletin M53-3. If magneto drive configuration is as shown in "E" Series Parts Catalog (Publication No. X30017), use Magneto Part Nos. 10-51365-43 or 10-500516-3.
2. Magnetos Part No. 10 10-51365-44 and 10-51365-45 may be factory rebuilt only if a serviceable Bushing P/N 10-116861 is provided.
3. Upon exhaustion of special parts for radio shielded S-22 and S-23 Series Magnetos, these magnetos may be converted to or replaced by standard configuration magneto part numbers shown.
4. Magnetos should be updated as a matching pair.
5. Continental Motors TSIOL-550-A engines originally equipped with indicated magnetos should be retrofitted to an S-1200 Magneto System. Contact Continental Motors Customer Service Department for details.

11-3. Illustrated Parts Lists by Magneto Series

Table 11-3. S4LN, S4RN-20 and -21 Magnetos

Index	Description	Part No.	10-51360-26	10-51360-27	10-51360-28	10-51360-29	10-51360-37	10-51360-40	10-51360-41	10-51360-45	10-51360-46	10-51360-47	10-51360-54	10-51360-58
1	**Pin**, Cotter	10-90751-18	1	1		1	1			1	1	1	1	1
		10-90751-19			1			1	1					
2	**Nut**, Drive Shaft	10-163151		1		1								
		10-51643	1				1			1	1	1	1	1
		10-51652Y			1			1	1					
3	**Washer**, Lock	10-3793	1				1			1	1	1	1	1
4	**Washer**, Plain	10-4093		1		1								
		10-51370	1				1			1	1	1	1	1
4	**Washer**, Keyed	10-51613			1			1	1					
5	**Bushing**	10-51651			1			1	1					
		10-163049	1				1			1	1	1	1	1
6	**Plate**, Drive	10-160850						1						
8	**Coupling**, Impulse													
	25º Lag	10-400302			1						1			
	25º Lag	10-400313	1				1			1		1		
	25º Lag	10-400301							1					
	15º Lag	10-400321											1	1
9	**Body**, Impulse Coupling	10-51333	1		1						1			
		10-51395							1					
		10-52903	1				1			1		1	1	1
10	**Spring**, Main	10-51324	1		1		1		1	1	1	1	1	1
11	**Cam Assy**., Imp. Cplg.	10-400166-2			1				1		1			
		10-400167-4	1				1			1		1		
		10-400167-1											1	1
12	**Screw**, w/lock washer	10-35936-7	4	4	4	4	4	4	4		4		4	
		10-157160								4		4		4
15	**Cover**, Contact	NLA[1 2]	1	1	1									
		NLA[1 2]				1	1	1	1		1		1	
		NLA[1 2]								1				1
		NLA[1 2]										1		
17	**Lead Assembly**, Tach.	10-400141										2		
18	**Sleeving**	654742-2-.50										1		
19	**Grommet**, Tach.	10-400103										1		
21	**Nut**, Cap	10-163177								1				1
22	**Disk**, Neoprene	10-163384								1				1
25	**Screw**, Fillister Head	10-35937-12	4	4	4	4	4	4	4	4	4	4	4	4
33	**Screw**, Hex Head	10-682025	1	1	1	1	1	1	1		1		1	

Table 11-3. S4LN, S4RN-20 and -21 Magnetos

Index	Description	Part No.	10-51360-26	10-51360-27	10-51360-28	10-51360-29	10-51360-37	10-51360-40	10-51360-41	10-51360-45	10-51360-46	10-51360-47	10-51360-54	10-51360-58
35	**Spring**	10-102090				1	1	1	1		1		1	
37	**Washer**, Plain	10-14268	1	1	1	1	1	1	1	1	1	2	1	1
37a	**Washer**, Plain	NAS620-8L										1		
38	**Bushing**, Tach.	10-361639										2		
39	**Contact Assembly**	10-382585								1		1		1
		10-357173	1	1	1									
		10-357174				1	1	1	1		1		1	
	(Tachometer)	10-400507										1		
40	**Plate**, Insulating	10-361624										1		
41	**Screw**, w/lock washer	10-35935-5								2		2		2
		10-35936-7	3	3	3	3	3	3	3	2	3	4	3	2
42	**Capacitor**	10-51676	1	1	1	1	1	1	1		1		1	
		10-400572								1		1		1
44	**Plug**, Solid	10-157135	1	1	1	1	1	1	1	1	1	1	1	1
45	Bushing	NLA[1]	1	1	1									
46	**Plug**, Ventilator	10-157134	1	1	1	1	1	1	1	1	1	1	1	1
47	**Screw**, w/lock washer	10-157158	5	5	5	5	5	5	5	5	5	5	5	5
48	**Housing**, Distributor	NLA[1]	1	1	1									
		NLA[1]				1	1	1	1		1		1	
		10-400551-7								1		1		1
50	**Housing**, Magneto	10-400549-1	1				1			1		1	1	1
		10-400549-2			1				1		1			
		10-400549-4		1		1		1						
52	**Plate**, Data	10-400012	1	1	1	1	1	1	1	1	1	1	1	1
53	**Key,** Woodruff	10-90788-5	3	2	3	2	3	3	3	3	3	3	3	3
54	**Magnet**, Rotating (Rotor)	10-52945		1		1								
		10-52946			1			1	1					
		10-52947	1				1			1	1	1	1	1
55	**Slinger**, Oil	10-51678	1	1	1	1	1	1	1	1	1	1	1	1
56	**Screw**, w/lock washer	10-35937-8	2	2	2	2	2	2	2	2	2	2	2	2
57	**Clamp**, Coil Core	10-50765	2	2	2	2	2	2	2	2	2	2	2	2
58	**Coil**	10-357165-20S	1	1	1	1	1	1	1		1		1	
		10-357165-1								1		1		1
59	**Seal**, Oil	10-400554	1	1	1	1	1	1	1	1	1	1	1	1
60	**Pin**, Stop	10-56513	2		2		2		2	2	2	2	2	2
	Pin, Stop, +0.0005 AO	10-400602	2		2		2		2	2	2	2	2	2
61	**Screw**, w/lock washer	10-391213	1	1	1	1	1	1	1	1	1	1	1	1
62	**Washer**, Plain	10-51354	1	1	1	1	1	1	1	1	1	1	1	1
63	**Cam**	10-50772-1	1	1	1	1	1	1	1		1		1	
		10-50772-5								1		1		1

Table 11-3. S4LN, S4RN-20 and -21 Magnetos

Index	Description	Part No.	10-51360-26	10-51360-27	10-51360-28	10-51360-29	10-51360-37	10-51360-40	10-51360-41	10-51360-45	10-51360-46	10-51360-47	10-51360-54	10-51360-58
64	**Bearing**, Ball	2-202	1	1	1	1	1	1	1	1	1	1	1	1
65	**Washer**, Shim													
	0.002 in. thick	2-199-1	AR	AR	AR	AR	AR	AR	AA	AR	AR	AR	AR	AR
	0.004 in. thick	2-199-2	AR	AR	AR	AR	AR	AR	AA	AR	AR	AR	AR	AR
	0.005 in. thick	2-199-3	AR	AR	AR	AR	AR	AR	AA	AR	AR	AR	AR	AR
	0.008 in. thick	2-199-4	AR	AR	AR	AR	AR	AR	AA	AR	AR	AR	AR	AR
	0.010 in. thick	2-199-5	AR	AR	AR	AR	AR	AR	AA	AR	AR	AR	AR	AR
	0.012 in. thick	2-199-6	AR	AR	AR	AR	AR	AR	AA	AR	AR	AR	AR	AR
66	**Washer**, Plain	10-3503	1	1	1	1	1	1	1	1	1	1	1	1
67	**Gear**, Pinion	10-157123Y	1	1	1	1	1	1	1	1	1	1	1	1
69	**Bearing**, Sleeve	10-25788	1	1	1	1	1	1	1	1	1	1	1	1
70	**Bearing**, Ball	10-81806	1	1	1	1	1	1	1	1	1	1	1	1
71	**Washer**, Shim													
	0.002 in. thick	2-161-1	AR	AR	AR	AR	AR	AR	AR	AR	AR	AR	AR	AR
	0.004 in. thick	2-161-2	AR	AR	AR	AR	AR	AR	AR	AR	AR	AR	AR	AR
	0.005 in. thick	2-161-3	AR	AR	AR	AR	AR	AR	AR	AR	AR	AR	AR	AR
	0.008 in. thick	2-161-4	AR	AR	AR	AR	AR	AR	AR	AR	AR	AR	AR	AR
	0.010 in. thick	2-161-5	AR	AR	AR	AR	AR	AR	AR	AR	AR	AR	AR	AR
	0.012 in. thick	2-161-6	AR	AR	AR	AR	AR	AR	AR	AR	AR	AR	AR	AR
	0.0015 in. thick	2-161-7	AR	AR	AR	AR	AR	AR	AR	AR	AR	AR	AR	AR
72	**Kit**, Distributor Gear	10-357584	1	1	1	1	1	1	1	1	1	1	1	1
73	**Brush**, Carbon	10-160844	1	1	1	1	1	1	1	1	1	1	1	1
74	**Ring**, Retaining	MS16624-2037	1	1	1	1	1	1	1	1	1	1	1	1
75	**Washer** 0.750 OD	10-349511	1	1	1	1	1	1	1	1	1	1	1	1
76	**Washer**, 0.562 OD	10-606505	1	1	1	1	1	1	1	1	1	1	1	1
77	**Washer**, Nylon	10-391309	1	1	1	1	1	1	1	1	1	1	1	1
78	**Screw**, w/Plain & Lock washer	10-102083	3	3	3	3	3	3	3	3	3	3	3	3
79	**Block**, Distributor	10-357424	1	1	1	1	1	1	1	1	1	1	1	1
80	**Spring**, Tower	10-50737	4	4	4	4	4	4	4	4	4	4	4	4
81	**Strip**, Felt	10-163374	1	1	1	1	1	1	1	1	1	1	1	1
82	**Washer**, Felt	10-50752	1	1	1	1	1	1	1	1	1	1	1	1

1. NLA - No Longer Available. The part number of the original component or assembly is no longer available. Should a part identified as "NLA" require replacement, modify the assembly, as noted herein, to convert the assembly to meet the current specification of the approved replacement assembly.
2. Magneto may be converted to a short cover model using the conversion chart in Table 11-14 and associated kit contents listed in Table 11-15. Record the conversion in the engine log book.

Table 11-4. S6LN, S6RN-20, -21, and -23 Magnetos

Index	Description	Part No.	10-51365-9	10-51365-32	10-51365-33	10-51365-34	10-51365-35	10-51365-39	10-51365-40	10-51365-43	10-51365-44	10-51365-45	10-51365-46	10-51365-47	10-51365-48	10-51365-54	10-51365-57	10-52350-20
1	**Pin,** Cotter	10-90751-18	1	1	1	1	1	1		1	1	1	1	1	1		1	1
		10-90751-19							1							1		
2	**Nut**, Drive Shaft	10-163151			1													
		10-51643	1	1		1	1	1		1	1	1			1			1
		10-51652Y							1							1		
		10-163178											1	1			1	
3	**Washer**, Lock	10-3793	1	1		1	1	1		1	1	1			1			1
4	**Washer**, Plain	10-4093			1													
		10-51370						1	1									
		10-116860										1		1			1	
		10-52307	1	1		1				1					1			1
		10-51613							1							1		
5	**Bushing**	10-51651							1							1		
		NLA[1]									1	1						
		10-163048											1	1			1	
		10-357193					1	1										
8	**Coupling**, Impulse																	
	35º Lag	10-400303													1			
	45º Lag	10-400314	1					1										
	45º Lag	10-400306					1											
	45º Lag	10-400315		1						1				1			1	1
	35º Lag	10-400305				1												
	35º Lag	10-400320										1						
	35º Lag	10-400304							1							1		
9	**Body,** Impulse Coupling	10-51333					1								1			
		10-51395							1							1		
		10-52903	1					1										
		10-70371		1						1		1		1			1	1
		10-76232				1												
10	**Spring**, Main	10-51324	1	1		1	1	1	1	1		1		1	1	1	1	1
11	**Cam Assy.**, Imp. Cplg.	10-400166-6				1			1						1	1		
		10-400167-8										1						
		10-400167-10	1	1				1		1				1			1	1
		10-400166-9					1											
12	**Screw**, w/lock washer	10-35936-7	4	4	4	4	4	4	4	4	4	4	4	4	4	4		4
		10-157160															4	
14	**Gasket**	10-52321Y																1
15	**Cover**, Contact	NLA[1 2]							1						1			
		NLA[1 2]	1	1	1	1	1	1		1	1	1	1	1		1		
		NLA[1 2]																1
		NLA[1 2]															1	

Table 11-4. S6LN, S6RN-20, -21, and -23 Magnetos

Index	Description	Part No.	10-51365-9	10-51365-32	10-51365-33	10-51365-34	10-51365-35	10-51365-39	10-51365-40	10-51365-43	10-51365-44	10-51365-45	10-51365-46	10-51365-47	10-51365-48	10-51365-54	10-51365-57	10-52350-20
21	**Nut**, Cap	10-163177															1	
22	**Disk**, Neoprene	10-163384															1	
25	**Screw**, Fillister Head	10-35937-12	4	4	4	4	4	4	4	4	4	4	4	4	4	4	4	4
33	**Screw**, Hex Head	10-682025	1	1	1	1	1	1	1	1	1	1	1	1	1	1		1
34	**Gasket**	10-357520															1	1
35	**Spring**	10-102090	1	1	1	1	1	1		1	1	1	1	1		1		1
37	**Washer**, Plain	10-14268	1	1	1	1	1	1	1	1	1	1	1	1	1	1	1	1
39	**Contact Assembly**	10-382585															1	
		10-357173							1						1			
		10-357174	1	1	1	1	1	1		1	1	1	1	1		1		1
41	**Screw,** w/lock washer	10-35935-5															2	
		10-35936-7	3	3	3	3	3	3	3	3	3	3	3	3	3	3	2	3
42	**Capacitor**	10-51676	1	1	1	1	1	1	1	1	1	1	1	1	1	1		1
		10-400572															1	
44	**Plug**, Solid	10-157135	1	1	1	1	1	1	1	1	1	1	1	1	1	1	1	
		10-51391																1
45	**Bushing**, P-Lead	NLA[1]							1						1			
46	**Plug**, Ventilator	10-157134	1	1	1	1	1	1	1	1	1	1	1	1	1	1	1	
		10-50732																1
47	**Screw**	10-157158	5	5	5	5	5	5	5	5	5	5	5	5	5	5	5	5
48	**Housing**, Distributor	NLA[1]	1	1	1	1	1	1		1	1	1	1	1		1		
		NLA[1]							1						1			
		10-400551-7															1	
		NLA[1]																1
49	**Gasket**	10-52320																1
50	**Housing**, Magneto	10-400549-1	1	1				1		1		1		1			1	
		10-400549-2				1	1		1						1	1		
		10-400549-4			1						1		1					
		NLA[1]																1
52	**Plate**, Data	10-400012	1	1	1	1	1	1	1	1	1	1	1	1	1	1	1	1
53	**Key**, Woodruff	10-90788-5	2	2	2	2	3	3	2	2	3	3	3	3	2	3	3	2
54	**Magnet**, Rotating (Rotor)	10-52945				1												
		10-52946							1							1		
		10-52947					1	1			1	1	1	1		1	1	
		10-52948	1	1		1				1					1			1
55	**Slinger**, Oil	10-51678	1	1	1	1	1	1	1	1	1	1	1	1	1	1	1	1
56	**Screw**, w/lock washer	10-35937-8	2	2	2	2	2	2	2	2	2	2	2	2	2	2	2	2
57	**Clamp**, Coil Core	10-50765	2	2	2	2	2	2	2	2	2	2	2	2	2	2	2	2
58	**Coil**	10-357165-20S	1	1	1	1	1	1	1	1	1	1	1	1	1	1		1
		10-357165-1															1	
59	**Seal**, Oil	10-400554	1	1	1	1	1	1	1	1	1	1	1	1	1	1	1	1

Table 11-4. S6LN, S6RN-20, -21, and -23 Magnetos

Index	Description	Part No.	10-51365-9	10-51365-32	10-51365-33	10-51365-34	10-51365-35	10-51365-39	10-51365-40	10-51365-43	10-51365-44	10-51365-45	10-51365-46	10-51365-47	10-51365-48	10-51365-54	10-51365-57	10-52350-20
60	**Pin**, Stop	10-56513	1	2		2	2	1	1	1		2		2	1	1	2	1
	Pin, Stop, +0.0005 AO	10-400602	1	2		2	2	1	1	1		2		2	1	1	2	1
61	**Screw**, w/lock washer	10-391213	1	1	1	1	1	1	1	1	1	1	1	1	1	1	1	1
62	**Washer**, Plain	10-51354	1	1	1	1	1	1	1	1	1	1	1	1	1	1	1	1
63	**Cam**	10-50772-1	1	1	1	1	1	1	1	1	1	1	1	1	1	1	1	1
		10-50772-5															1	
64	**Bearing**, Ball	2-202	1	1	1	1	1	1	1	1	1	1	1	1	1	1	1	1
65	**Washer**, Shim																	
	0.002 in. thick	2-199-1	AR	AR	AR	AR	AR	AR	AR	AR	AR	AR	AR	AR	AR	AR	AR	AR
	0.004 in. thick	2-199-2	AR	AR	AR	AR	AR	AR	AR	AR	AR	AR	AR	AR	AR	AR	AR	AR
	0.005 in. thick	2-199-3	AR	AR	AR	AR	AR	AR	AR	AR	AR	AR	AR	AR	AR	AR	AR	AR
	0.008 in. thick	2-199-4	AR	AR	AR	AR	AR	AR	AR	AR	AR	AR	AR	AR	AR	AR	AR	AR
	0.010 in. thick	2-199-5	AR	AR	AR	AR	AR	AR	AR	AR	AR	AR	AR	AR	AR	AR	AR	AR
65	0.012 in. thick	2-199-6	AR	AR	AR	AR	AR	AR	AR	AR	AR	AR	AR	AR	AR	AR	AR	AR
66	**Washer**, Plain	10-3503	1	1	1	1	1	1	1	1	1	1	1	1	1	1	1	1
67	**Gear**, Pinion	10-157120Y	1	1	1	1	1	1	1	1	1	1	1	1	1	1	1	1
69	**Bearing**, Sleeve	10-25788	1	1	1	1	1	1	1	1	1	1	1	1	1	1	1	1
70	**Bearing**, Ball	10-81806	1	1	1	1	1	1	1	1	1	1	1	1	1	1	1	1
71	**Washer**, Shim																	
	0.002 in. thick	2-161-1	AR	AR	AR	AR	AR	AR	AR	AR	AR	AR	AR	AR	AR	AR	AR	AR
	0.004 in. thick	2-161-2	AR	AR	AR	AR	AR	AR	AR	AR	AR	AR	AR	AR	AR	AR	AR	AR
	0.005 in. thick	2-161-3	AR	AR	AR	AR	AR	AR	AR	AR	AR	AR	AR	AR	AR	AR	AR	AR
	0.008 in. thick	2-161-4	AR	AR	AR	AR	AR	AR	AR	AR	AR	AR	AR	AR	AR	AR	AR	AR
	0.010 in. thick	2-161-5	AR	AR	AR	AR	AR	AR	AR	AR	AR	AR	AR	AR	AR	AR	AR	AR
	0.012 in. thick	2-161-6	AR	AR	AR	AR	AR	AR	AR	AR	AR	AR	AR	AR	AR	AR	AR	AR
	0.0015 in. thick	2-161-7	AR	AR	AR	AR	AR	AR	AR	AR	AR	AR	AR	AR	AR	AR	AR	AR
72	**Kit**, Distributor Gear	10-357586	1	1	1	1	1	1	1	1	1	1	1	1	1	1	1	1
73	**Brush**, Carbon	10-160844	1	1	1	1	1	1	1	1	1	1	1	1	1	1	1	1
74	**Ring**, Retaining	MS16624-2037	1	1	1	1	1	1	1	1	1	1	1	1	1	1	1	1
75	**Washer** 0.750 OD	10-349511	1	1	1	1	1	1	1	1	1	1	1	1	1	1	1	1
76	**Washer**, 0.562 OD	10-606505	1	1	1	1	1	1	1	1	1	1	1	1	1	1	1	1
77	**Washer**, Nylon	10-391309	1	1	1	1	1	1	1	1	1	1	1	1	1	1	1	1
78	**Screw**, w/plain & lock washer	10-102083	3	3	3	3	3	3	3	3	3	3	3	3	3	3	3	3
79	**Block**, Distributor	10-357426	1	1	1	1	1	1	1	1	1	1	1	1	1	1	1	1
80	**Spring**, Tower	10-50737	6	6	6	6	6	6	6	6	6	6	6	6	6	6	6	6
81	**Strip**, Felt	10-163374	1	1	1	1	1	1	1	1	1	1	1	1	1	1	1	1
82	**Washer**, Felt	10-50752	1	1	1	1	1	1	1	1	1	1	1	1	1	1	1	1

1. NLA - No Longer Available. The part number of the original component or assembly is no longer available. Should a part identified as "NLA" require replacement, modify the assembly, as noted herein, to convert the assembly to meet the current specification of the approved replacement assembly.
2. Magneto may be converted to a short cover model using the conversion chart in Table 11-14 and associated kit contents listed in Table 11-15. Record the conversion in the engine log book

Table 11-5. S6LN, S6RN-25, and -25P Magnetos

Index	Description	Part No.	10-79020-6	10-79020-10	10-79020-11	10-79020-16	10-79020-17	10-79020-18	10-79020-19	10-79020-118	10-79020-119
1	**Pin,** Cotter	10-90751-18	1	1	1	1	1	1	1	1	1
2	**Nut**, Drive Shaft	10-51643	1	1	1	1	1	1	1	1	1
3	**Washer**, Lock	10-3793	1	1	1	1	1	1	1	1	1
4	**Washer**, Plain	10-52307	1	1	1	1	1	1	1	1	1
8	**Coupling**, Impulse										
	30º Lag	10-400316	1		1	1	1	1		1	
	30º Lag	10-400307		1					1		1
9	**Body**, Impulse Coupling	10-70371	1		1	1	1	1		1	
		10-76232		1					1		1
10	**Spring**, Main	10-51324	1	1	1	1	1	1	1	1	1
11	**Cam Assy**., Imp. Cplg.	10-400166-4		1					1		1
		10-400167-6	1		1	1	1	1		1	
12	**Screw**, w/lock washer, Short	10-35936-7	4	4		4					
	Screw, w/lock washer, Long	10-157160			4		4	4	4	4	4
14	**Gasket**, Contact Cover	10-357532								1	1
15	**Cover**, Contact	10-52939Y	1	1		1					
		NLA[1 2]						1	1	1	1
		NLA[1 2]			1		1				
17	**Lead Assembly**, Tach.	10-400141			2		2				
18	**Sleeving**	654742-2-.50			1		1				
19	**Grommet**, Tach.	10-400103			1		1				
21	**Nut**, Cap	10-163177						1	1	1	1
22	**Disk**, Neoprene	10-163384						1	1	1	1
25	**Screw**, Fillister Head	10-35937-12	4	4	4	4	4	4	4	4	4
33	**Screw**, Hex Head	10-682025	1	1		1					
34	**Gasket**	10-357520								1	1
35	**Spring**, Switch Terminal	10-102090	1	1		1					
37	**Washer,** Plain	10-14268	1	1	2	1	2	1	1	1	1
37a	**Washer,** Plain	NAS620-8L			1		1				
38	**Bushing**, Tach.	10-361639			2		2				
39	**Contact Assembly**	10-382585			1		1	1		1	
		10-357174	1	1	1						
		10-382584							1		1
	(Tachometer)	10-400507			1		1				
40	**Plate**, Insulating, Tach.	10-361624			1		1				
41	**Screw**, w/lock washer	10-35935-5			2		2	2	2	2	2
		10-35936-7	3	3	4	3	4	2	2	2	2
42	**Capacitor**	10-51676	1	1		1					
		10-400572				1		1	1	1	1

Table 11-5. S6LN, S6RN-25, and -25P Magnetos

Index	Description	Part No.	10-79020-6	10-79020-10	10-79020-11	10-79020-16	10-79020-17	10-79020-18	10-79020-19	10-79020-118	10-79020-119
44	**Plug**, Solid	10-157135	1	1	1	1	1	1	1	1	1
46	**Plug**, Ventilator	10-157134	1	1	1	1	1	1	1		
46a	**Orifice**, Air Bleed	10-382861								1	1
47	**Screw**, w/lock washer	10-157158	5	5	5	5	5	5	5	5	5
48	**Housing**, Distributor	NLA[1]	1	1		1					
		10-400551-7			1		1		1		1
		10-400551-8						1		1	
49	**Gasket**, Housing	10-357533								1	1
50	**Housing**, Magneto	10-400552-1	1		1	1	1	1		1	
		10-400552-2		1					1		1
52	**Plate**, Data	10-400012	1	1	1	1	1	1	1	1	1
53	**Key**, Woodruff	10-90788-5	2	2	2	2	2	2	2	2	2
54	**Magnet**, Rotating (Rotor)	10-52948	1	1	1	1	1	1	1	1	1
55	**Slinger**, Oil	10-51678	1	1	1	1	1	1	1	1	1
56	**Screw**, w/lock washer	10-35937-8	2	2	2	2	2	2	2	2	2
57	**Clamp**, Coil Core	10-50765	2	2	2	2	2	2	2	2	2
58	**Coil**	10-357165-20S	1	1		1					
		10-357165-1			1		1	1	1	1	1
59	**Seal**, Oil	10-400554	1	1	1	1	1	1	1	1	1
60	**Pin**, Stop	10-79011	2	2	2	2	2	2	2	2	2
	Pin, Stop, +0.0005 AO	10-400603	2	2	2	2	2	2	2	2	2
61	**Screw**, w/lock washer	10-391213	1	1	1	1	1	1	1	1	1
62	**Washer**, Plain	10-51354	1	1	1	1	1	1	1	1	1
63	**Cam**	10-50772-1	1	1		1					
		10-50772-4							1		1
		10-50772-5			1		1	1		1	
64	**Bearing,** Ball	2-202	1	1	1	1	1	1	1	1	1
65	**Washer**, Shim										
	0.002 in. thick	2-199-1	AR	AR	AR	AR	AR	AR	AR	AR	AR
	0.004 in. thick	2-199-2	AR	AR	AR	AR	AR	AR	AR	AR	AR
	0.005 in. thick	2-199-3	AR	AR	AR	AR	AR	AR	AR	AR	AR
	0.008 in. thick	2-199-4	AR	AR	AR	AR	AR	AR	AR	AR	AR
	0.010 in. thick	2-199-5	AR	AR	AR	AR	AR	AR	AR	AR	AR
	0.012 in. thick	2-199-6	AR	AR	AR	AR	AR	AR	AR	AR	AR
66	**Washer**, Plain	10-3503	1	1	1	1	1	1	1	1	1
67	**Gear**, Pinion	10-157120Y	1	1	1	1	1	1	1	1	1
69	**Bearing**, Sleeve	10-25788	1	1	1	1	1	1	1	1	1
70	**Bearing**, Ball	10-81806	1	1	1	1	1	1	1	1	1

Table 11-5. S6LN, S6RN-25, and -25P Magnetos

Index	Description	Part No.	10-79020-6	10-79020-10	10-79020-11	10-79020-16	10-79020-17	10-79020-18	10-79020-19	10-79020-118	10-79020-119
71	**Washer**, Shim										
	0.002 in. thick	2-161-1	AR	AR	AR	AR	AR	AR	AR	AR	AR
	0.004 in. thick	2-161-2	AR	AR	AR	AR	AR	AR	AR	AR	AR
	0.005 in. thick	2-161-3	AR	AR	AR	AR	AR	AR	AR	AR	AR
	0.008 in. thick	2-161-4	AR	AR	AR	AR	AR	AR	AR	AR	AR
	0.010 in. thick	2-161-5	AR	AR	AR	AR	AR	AR	AR	AR	AR
	0.012 in. thick	2-161-6	AR	AR	AR	AR	AR	AR	AR	AR	AR
	0.0015 in. thick	2-161-7	AR	AR	AR	AR	AR	AR	AR	AR	AR
72	**Kit**, Distributor Gear	10-357586	1	1	1	1	1	1	1	1	1
73	**Brush**, Carbon	10-160844	1	1	1	1	1	1	1	1	1
74	**Ring**, Retaining	MS16624-2037	1	1	1	1	1	1	1	1	1
75	**Washer,** 0.750 OD	10-349511	1	1	1	1	1	1	1	1	1
76	**Washer**, 0.562 OD	10-606505	1	1	1	1	1	1	1	1	1
77	**Washer**, Nylon	10-391309	1	1	1	1	1	1	1	1	1
78	**Screw**, w/plain & lock washer	10-102083	3	3	3	3	3	3	3	3	3
79	**Block**, Distributor	10-357426	1	1	1	1	1	1	1	1	1
80	**Spring**, Tower	10-50737	6	6	6	6	6	6	6	6	6
81	**Strip**, Felt	10-163374	1	1	1	1	1	1	1	1	1
82	**Washer**, Felt	10-50752	1	1	1	1	1	1	1	1	1

1. NLA - No Longer Available. The part number of the original component or assembly is no longer available. Should a part identified as “NLA” require replacement, modify the assembly, as noted herein, to convert the assembly to meet the current specification of the approved replacement assembly.
2. Magneto may be converted to a short cover model using the conversion chart in Table 11-14 and associated kit contents listed in Table 11-15. Record the conversion in the engine log book.

Table 11-6. S4LN, S4RN-200, -201, -204 and -205 Magnetos

Index	Description	Part No.	10-163005-2	10-163005-3	10-163005-11	10-163015-3	10-163045-1	10-163045-3	10-163045-6	10-163055-1
1	**Pin**, Cotter	10-90751-18	1	1	1	1	1	1	1	1
2	**Nut**, Drive Shaft	10-163151	1		1			1	1	1
		10-51643		1		1	1			1
3	**Washer**, Lock	10-3793		1		1	1			1
4	**Washer**, Plain	10-4093	1		1	1		1	1	1
		10-400640		1			1			
5	**Bushing**	10-163049		1			1			
7	**Plate**, Drive	10-163003				1				1
		10-163214		1			1			
12	**Screw**, w/lock washer	10-157160	4	4	4	4	4	4	4	4
15	**Cover**, Contact	NLA[1 2]	1	1	1	1	1	1		1
		NLA[1 2]							1	
17	**Lead Assembly**, Tach.	10-400141							2	
18	**Sleeving**	654742-2-.50							1	
19	**Grommet**, Tach.	10-400103							1	
21	**Nut**, Cap	10-163177					1	1		1
22	**Disk**, Neoprene	10-163384					1	1		1
23	**Lead Assembly**, Retard	10-157241	1	1	1	1				
24	**Paper**, Retard	10-163194	1	1	1	1				
25	**Screw**, Fillister Head	10-35937-12	4	4	4	4	4	4	4	4
37	**Washer**, Plain	10-14268	2	2	2	2	1	1	2	1
37a		NAS620-8L							1	
38	**Bushing**, Tach.	10-361639							2	
39	**Contact Assembl**y	10-382585	1	1	1	1	1	1	1	1
		10-382584	1	1	1	1			1	1
	(Tachometer)	10-400507							1	
40	**Plate**, Insulating, Tach.	10-361624							1	
41	**Screw**, w/lock washer	10-35935-5	2	2	2	2	2	2	2	2
		10-35936-7	4	4	4	4	2	2	4	2
42	**Capacitor**	10-400572	1	1	1	1	1	1	1	1
43	**Tubing**	10-357494			1					
44	**Plug**, Solid	10-157135	1	1	1	1	1	1	1	1
46	**Plug**, Ventilator	10-157134	1	1	1	1	1	1	1	1
47	**Screw**, w/lock washer	10-157158	5	5	5	5	5	5	5	5
48	**Housing**, Distributor	10-400551-1				1				
		10-400551-2	1	1						
		10-400551-5			1					
		10-400551-7					1	1	1	
		10-400551-8								1

Table 11-6. S4LN, S4RN-200, -201, -204 and -205 Magnetos

Index	Description	Part No.	10-163005-2	10-163005-3	10-163005-11	10-163015-3	10-163045-1	10-163045-3	10-163045-6	10-163055-1
49	**Gasket**	10-357533								1
50	**Housing**, Magneto	10-400549-4	1	1	1		1	1	1	
		10-400552-4				1				1
52	**Plate**, Data	10-400012	1	1	1	1	1	1	1	1
53	**Key**, Woodruff	10-90788-5	2	3	2	2	3	2	2	2
54	**Magnet**, Rotating (Rotor)	10-52945	1					1	1	
		10-357479		1						
		10-52947			1			1		
		10-52948								
55	**Slinger**, Oil	10-51678	1	1	1	1	1	1	1	1
56	**Screw**, w/lock washer	10-35937-8	2	2	2	2	2	2	2	2
57	**Clamp**, Coil Core	10-50765	2	2	2	2	2	2	2	2
58	**Coil**	10-357165-1	1	1	1	1	1	1	1	1
59	**Seal**, Oil	10-400554	1	1	1	1	1	1	1	1
61	**Screw**, w/lock washer	10-391213	1	1	1	1	1	1	1	1
62	**Washer**, Plain	10-51354	1	1	1	1	1	1	1	1
63	**Cam**	10-50772-4				1			1	1
		10-50772-5	1	1	1		1	1	1	
64	**Bearing**, Ball	2-202	1	1	1	1	1	1	1	1
65	**Washer**, Shim									
	0.002 in. thick	2-199-1	AR	AR	AR	AR	AR	AR	AR	AR
	0.004 in. thick	2-199-2	AR	AR	AR	AR	AR	AR	AR	AR
	0.005 in. thick	2-199-3	AR	AR	AR	AR	AR	AR	AR	AR
	0.008 in. thick	2-199-4	AR	AR	AR	AR	AR	AR	AR	AR
	0.010 in. thick	2-199-5	AR	AR	AR	AR	AR	AR	AR	AR
	0.012 in. thick	2-199-6	AR	AR	AR	AR	AR	AR	AR	AR
66	**Washer**, Plain	10-3503	1	1	1	1	1	1	1	1
67	**Gear**, Pinion	10-157123Y	1	1	1	1	1	1	1	1
69	**Bearing**, Sleeve	10-25788	1	1	1	1	1	1	1	1
70	**Bearing**, Ball	10-81806	1	1	1	1	1	1	1	1
71	**Washer**, Shim	2-161-1	AR	AR	AR	AR	AR	AR	AR	AR
	0.002 in. thick	2-161-1	AR	AR	AR	AR	AR	AR	AR	AR
	0.004 in. thick	2-161-2	AR	AR	AR	AR	AR	AR	AR	AR
	0.005 in. thick	2-161-3	AR	AR	AR	AR	AR	AR	AR	AR
	0.008 in. thick	2-161-4	AR	AR	AR	AR	AR	AR	AR	AR
	0.010 in. thick	2-161-5	AR	AR	AR	AR	AR	AR	AR	AR
	0.012 in. thick	2-161-6	AR	AR	AR	AR	AR	AR	AR	AR
	0.0015 in. thick	2-161-7	AR	AR	AR	AR	AR	AR	AR	AR
72	**Kit**, Distributor Gear	10-357584	1	1	1	1	1	1	1	1
73	**Brush**, Carbon	10-160844	1	1	1	1	1	1	1	1
74	**Ring**, Retaining	MS16624-2037	1	1	1	1	1	1	1	1

Table 11-6. S4LN, S4RN-200, -201, -204 and -205 Magnetos

Index	Description	Part No.	10-163005-2	10-163005-3	10-163005-11	10-163015-3	10-163045-1	10-163045-3	10-163045-6	10-163055-1
75	**Washer** 0.750 OD	10-349511	1	1	1	1	1	1	1	1
76	**Washer**, 0.562 OD	10-606505	1	1	1	1	1	1	1	1
77	**Washer**, Nylon	10-391309	1	1	1	1	1	1	1	1
78	**Screw**, w/plain & lock washer	10-102083	3	3	3	3	3	3	3	3
79	**Block**, Distributor	10-357424	1	1	1	1	1	1	1	1
80	**Spring**, Tower	10-50737	4	4	4	4	4	4	4	4
81	**Strip**, Felt	10-163374	1	1	1	1	1	1	1	1
82	**Washer**, Felt	10-50752	1	1	1	1	1	1	1	1

1. NLA - No Longer Available. The part number of the original component or assembly is no longer available. Should a part identified as “NLA” require replacement, modify the assembly, as noted herein, to convert the assembly to meet the current specification of the approved replacement assembly.
2. Magneto may be converted to a short cover model using the conversion chart in Table 11-14 and associated kit contents listed in Table 11-15. Record the conversion in the engine log book.

Table 11-7. S6LN, S6RN-200, -201, -204 and -205 Magnetos

Index	Description	Part No.	10-163010-1	10-163010-2	10-163010-10	10-163010-11	10-163010-15	10-163020-3	10-163020-4	10-163050-1	10-163050-2	10-163050-7	10-163050-9	10-163050-12	10-163060-1	10-163060-2
1	**Pin**, Cotter	10-90751-18	1	1	1	1	1	1	1	1	1	1	1	1		1
2	**Nut**, Drive Shaft	10-163151	1	1			1			1		1				
		10-51643				1		1	1		1				1	1
		10-163178			1								1	1		
3	**Washer**, Lock	10-3793						1	1						1	1
4	**Washer**, Plain	10-4093	1	1			1	1	1	1		1			1	1
		10-116860				1					1					
5	**Bushing**	10-163048			1						1		1	1		
		10-357193				1					1					
7	**Plate**, Drive	10-163003						1	1						1	1
		10-163216				1					1					
12	**Screw**, w/lock washer	10-157160	4	4	4	4	4	4	4	4	4	4	4	4	4	4
15	**Cover**, Contact	NLA[1 2]	1	1	1	1	1	1	1	1	1	1	1	1	1	1
17	**Lead Assembly**, Tach.	10-400141												2		
18	**Sleeving**	654742-2-.50												1		
19	**Grommet**, Tach.	10-400103												1		
21	**Nut**, Cap	10-163177								1	1	1	1		1	1
22	**Disk**, Neoprene	10-163384								1	1	1	1		1	1
23	**Lead Assembly**, Retard	10-157241	1	1	1	1	1	1	1							
24	**Paper**, Retard	10-163194	1	1	1	1	1	1	1							
25	**Screw**, Fillister Head	10-35937-12	4	4	4	4	4	4	4	4	4	4	4	4	4	4
37	**Washer**, Plain	10-14268	2	2	2	2	2	2	2	1	1	1	1	2	1	1
37a	**Washer**, Plain	NAS620-8L												1		
38	**Bushing**, Tach.	10-361639												2		
39	**Contact Assembly**	10-382585	1	1	1	1	1	1	1	1	1		1	1		1
		10-382584	1	1	1	1	1	1	1			1		1	1	1
	(Tachometer)	10-400507												1		
40	**Plate**, Insulating, Tach.	10-361624												1		
41	**Screw**, w/lock washer	10-35935-5	2	2	2	2	2	2	2	2	2	2	2	2	2	2
		10-35936-7	4	4	4	4	4	4	4	2	2	2	2	4	2	2
42	**Capacitor**	10-400572	1	1	1	1	1	1	1	1	1	1	1	1	1	1
44	**Plug**, Solid	10-157135	1	1	1	1	1	1	1	1	1	1	1	1	1	1
46	**Plug**, Ventilator	10-157134	1	1	1	1	1	1	1	1	1	1	1	1	1	1
47	**Screw**, w/lock washer	10-157158	5	5	5	5	5	5	5	5	5	5	5	5	5	5
48	**Housing**, Distributor	10-400551-4			1											
		10-400551-6					1									
		10-400551-7		1		1			1	1	1		1	1		1
		10-400551-8	1					1				1			1	
49	**Gasket,** Housing	10-357533														1

Table 11-7. S6LN, S6RN-200, -201, -204 and -205 Magnetos

Index	Description	Part No.	10-163010-1	10-163010-2	10-163010-10	10-163010-11	10-163010-15	10-163020-3	10-163020-4	10-163050-1	10-163050-2	10-163050-7	10-163050-9	10-163050-12	10-163060-1	10-163060-2
50	**Housing**, Magneto	10-400549-4	1	1	1	1	1			1	1	1	1	1		
		10-400552-4						1	1						1	1
52	**Plate**, Data	10-400012	1	1	1	1	1	1	1	1	1	1	1	1	1	1
53	**Key**, Woodruff	10-90788-5	2	2	3	3	3	2	2	2	3	2	3	3	2	2
54	**Magnet**, Rotating (Rotor)	10-52945	1	1			1			1		1				
		10-52947			1	1					1		1	1		
		10-52948						1	1						1	1
55	**Slinger**, Oil	10-51678	1	1	1	1	1	1	1	1	1	1	1	1	1	1
56	**Screw** w/lock washer	10-35937-8	2	2	2	2	2	2	2	2	2	2	2	2	2	2
57	**Clamp**, Coil Core	10-50765	2	2	2	2	2	2	2	2	2	2	2	2	2	2
58	**Coil**	10-357165-1	1	1	1	1	1	1	1	1	1	1	1	1	1	1
59	**Seal**, Oil	10-400554	1	1	1	1	1	1	1	1	1	1	1	1	1	1
61	**Screw**, w/lock washer	10-391213	1	1	1	1	1	1	1	1	1	1	1	1	1	1
62	**Washer**, Plain	10-513541	1	1	1	1	1	1	1	1	1	1	1	1	1	1
63	**Cam**	10-50772-4	1				1	1				1			1	
		10-50772-5		1	1	1			1	1	1		1	1		1
64	**Bearing**, Ball	2-202	1	1	1	1	1	1	1	1	1	1	1	1	1	1
65	**Washer**, Shim															
	0.002 in. thick	2-199-1	AR	AR	AR	AR	AR	AR	AR	AR	AR	AR	AR	AR	AR	AR
	0.004 in. thick	2-199-2	AR	AR	AR	AR	AR	AR	AR	AR	AR	AR	AR	AR	AR	AR
	0.005 in. thick	2-199-3	AR	AR	AR	AR	AR	AR	AR	AR	AR	AR	AR	AR	AR	AR
	0.008 in. thick	2-199-4	AR	AR	AR	AR	AR	AR	AR	AR	AR	AR	AR	AR	AR	AR
	0.010 in. thick	2-199-5	AR	AR	AR	AR	AR	AR	AR	AR	AR	AR	AR	AR	AR	AR
	0.012 in. thick	2-199-6	AR	AR	AR	AR	AR	AR	AR	AR	AR	AR	AR	AR	AR	AR
66	**Washer**, Plain	10-3503	1	1	1	1	1	1	1	1	1	1	1	1	1	1
67	**Gear**, Pinion	10-157123Y	1	1	1	1	1	1	1	1	1	1	1	1	1	1
69	**Bearing**, Sleeve	10-25788	1	1	1	1	1	1	1	1	1	1	1	1	1	1
70	**Bearing**, Ball	10-81806	1	1	1	1	1	1	1	1	1	1	1	1	1	1
71	**Washer**, Shim															
	0.002 in. thick	2-161-1	AR	AR	AR	AR	AR	AR	AR	AR	AR	AR	AR	AR	AR	AR
	0.004 in. thick	2-161-2	AR	AR	AR	AR	AR	AR	AR	AR	AR	AR	AR	AR	AR	AR
	0.005 in. thick	2-161-3	AR	AR	AR	AR	AR	AR	AR	AR	AR	AR	AR	AR	AR	AR
	0.008 in. thick	2-161-4	AR	AR	AR	AR	AR	AR	AR	AR	AR	AR	AR	AR	AR	AR
	0.010 in. thick	2-161-5	AR	AR	AR	AR	AR	AR	AR	AR	AR	AR	AR	AR	AR	AR
	0.012 in. thick	2-161-6	AR	AR	AR	AR	AR	AR	AR	AR	AR	AR	AR	AR	AR	AR
	0.0015 in. thick	2-161-7	AR	AR	AR	AR	AR	AR	AR	AR	AR	AR	AR	AR	AR	AR
72	**Kit**, Distributor Gear	10-357586	1	1	1	1	1	1	1	1	1	1	1	1	1	1
73	**Brush**, Carbon	10-160844	1	1	1	1	1	1	1	1	1	1	1	1	1	1
74	**Ring**, Retaining	MS16624-2037	1	1	1	1	1	1	1	1	1	1	1	1	1	1
75	**Washer** 0.750 OD	10-349511	1	1	1	1	1	1	1	1	1	1	1	1	1	1

Table 11-7. S6LN, S6RN-200, -201, -204 and -205 Magnetos

Index	Description	Part No.	10-163010-1	10-163010-2	10-163010-10	10-163010-11	10-163010-15	10-163020-3	10-163020-4	10-163050-1	10-163050-2	10-163050-7	10-163050-9	10-163050-12	10-163060-1	10-163060-2
76	**Washer**, 0.562 OD	10-606505	1	1	1	1	1	1	1	1	1	1	1	1	1	1
77	**Washer**, Nylon	10-391309	1	1	1	1	1	1	1	1	1	1	1	1	1	1
78	**Screw**, w/Plain & Lock washer	10-102083	3	3	3	3	3	3	3	3	3	3	3	3	3	3
79	**Block**, Distributor	10-357426	1	1	1	1	1	1	1	1	1	1	1	1	1	1
80	**Spring**, Tower	10-50737	6	6	6	6	6	6	6	6	6	6	6	6	6	6
81	**Strip**, Felt	10-163374	1	1	1	1	1	1	1	1	1	1	1	1	1	1
82	**Washer**, Felt	10-50752	1	1	1	1	1	1	1	1	1	1	1	1	1	1

1. NLA - No Longer Available. The part number of the original component or assembly is no longer available. Should a part identified as “NLA” require replacement, modify the assembly, as noted herein, to convert the assembly to meet the current specification of the approved replacement assembly.
2. Magneto may be converted to a short cover model using the conversion chart in Table 11-14 and associated kit contents listed in Table 11-15. Record the conversion in the engine log book.

Table 11-8. S4LSC, S4RSC-21, -21T, -200, -201, -204, -204T and -205 Magnetos

Index	Description	Part No.	10-500514-1	10-500514-2	10-500514-3	10-500514-4	10-500514-5	10-500514-8	10-500514-201	10-600604-1	10-600614-1	10-600614-2	10-600614-3	10-600644-1	10-600644-3	10-600644-4	10-600644-5	10-600644-201	10-600644-202	10-600654-1
1	**Pin**, Cotter	10-90751-18	1	1		1		1	1	1	1	1	1	1	1	1		1	1	1
		10-90751-19			1		1										1			
2	**Nut**, Drive Shaft	10-163151						1			1	1		1				1		
		10-51643	1	1		1		1	1	1			1		1	1			1	1
		10-51652Y			1		1										1			
3	**Washer**, Lock	10-3793	1	1		1		1	1	1			1			1			1	1
4	**Washer**, Plain	10-4093								1	1	1		1	1			1		1
		10-51370	1	1		1		1	1											
		10-400640											1			1			1	
	Washer, Keyed	10-51613			1		1										1			
5	Bushing	10-51651			1		1										1			
		10-163049	1	1		1		1	1				1	1		1			1	
6	**Plate**, Drive	10-160850															1			
7	**Plate**, Drive	10-163003								1										1
		10-163214											1			1			1	
8	**Coupling**, Impulse																			
	25º Lag	10-400302			1	1														
	25º Lag	10-400313	1					1	1											
	25º Lag	10-400301					1													
	15º Lag	10-400321		1																
9	**Body**, Impulse Coupling	10-51333			1	1														
		10-51395					1													
		10-52903	1	1				1	1											
10	**Spring**, Main	10-51324	1	1	1	1	1	1	1											
11	**Cam**	10-400166-2			1	1	1													
		10-400167-4	1					1	1											
		10-400167-1		1																
12	**Screw**, w/lock washer	10-157160	4	4	4	4	4	4	4	4	4	4	4	4	4	4	4	4	4	4
15	**Cover**, Contact	10-400160-3	1	1	1	1	1							1	1	1	1			1
		10-400160-7							1									1		
		10-400160-1								1	1	1	1							
		10-400547-3						1												
		10-400547-5																	1	
16	**Washer**, Lock	MS35338-43	1	1	1	1	1	1	1	2	2	2	2	2	1	1	1	1	2	1
17	**Lead Assembly**, Tach.	10-400141							2									2		
18	**Sleeving**	654742-2-.50							1									1		
19	**Grommet**, Tach.	10-400103							1									1		
23	**Lead Assembly**, Retard	10-400050								1	1	1	1						1	
25	**Screw**, w/lock washer	10-35937-12	4	4	4	4	4	4	4	5	5	5	5	4	4	4	4	4	4	4
26	**Washer**, Insulating	10-16092								1	1	1	1						1	
27	**Bushing**, Insulating	10-125996								1	1	1	1						1	

Table 11-8. S4LSC, S4RSC-21, -21T, -200, -201, -204, -204T and -205 Magnetos

Index	Description	Part No.	10-500514-1	10-500514-2	10-500514-3	10-500514-4	10-500514-5	10-500514-8	10-500514-201	10-600604-1	10-600614-1	10-600614-2	10-600614-3	10-600644-1	10-600644-3	10-600644-4	10-600644-5	10-600644-201	10-600644-202	10-600654-1
28	**Nut**	MS35650-302	1	1	1	1	1	1	1	3	3	3	3	1	1	1	1	1	3	1
36	**Packing**	10-349263	1	1	1	1	1	1	1	1	1	1	1	1	1	1	1	1	1	1
37	**Washer**, Plain	10-14268	1	1	1	1	1	1	2	2	2	2	2	1	1	1	1	2	2	1
37a	**Washer**, Plain	NAS620-8L							1									1		
38	**Bushing**, Tachometer	10-361639							2									2		
39	**Contact Assembly**	10-382585	1	1				1	1	1	1	1	1	1		1		1	1	
		10-382584			1	1	1			1	1	1	1		1		1			1
	(Tachometer)	10-400507							1									1		
	(Tachometer)	10-349970																	1	
40	**Plate**, Insulating	10-361624							1									1		
41a	**Screw**, w/lock washer	10-35935-6	2	2	2	2	2	2	2	2	2	2	2	2	2	2	2	2	2	2
41	**Screw**, w/lock washer	10-35936-7	2	2	2	2	2	2	4	4	4	4	4	2	2	2	2	4	4	2
42	**Capacitor**	10-400615	1	1	1	1	1	1	1	1	1	1	1	1	1	1	1	1	1	1
43	**Tubing**	10-400191										1								
44	**Plug**, Solid	10-157135	1	1	1	1	1	1	1	1	1	1	1	1	1	1	1	1	1	1
46	**Plug**, Ventilator	10-157134	1	1	1	1	1	1	1	1	1	1	1	1	1	1	1	1	1	1
47	**Screw**, w/lock washer	10-157158	5	5	5	5	5	5	5	5	5	5	5	5	5	5	5	5	5	5
48	**Housing**, Distributor	10-400545-3						1											1	
		10-400551-1								1										
		10-400551-2									1		1							
		10-400551-5										1								
		10-400551-7	1	1					1					1		1		1		
		10-400551-8			1	1	1			1					1		1			1
50	**Housing**, Magneto	10-400549-1	1	1					1											
		10-400552-2			1	1	1													
		10-400549-4									1	1	1	1	1	1	1	1		
		10-400552-4								1										1
		10-400630-4						1												
		10-400630-6																	1	
52	**Plate**, Data	10-400012	1	1	1	1	1	1	1	1	1	1	1	1	1	1	1	1	1	1
53	**Key**, Woodruff	10-90788-5	3	3	3	3	3	3	3	2	3	3	3	2	2	3	3	2	3	2
54	**Magnet**, Rotating (Rotor)	10-52945									1			1	1			1		
		10-52946			1		1										1			
		10-52947	1	1		1		1	1				1			1			1	
		10-52948								1										1
		10-357479										1								
55	**Slinger**, Oil	10-51678	1	1	1	1	1	1	1	1	1	1	1	1	1	1	1	1	1	1
56	**Screw,** w/lock washer	10-35937-8	2	2	2	2	2	2	2	2	2	2	2	2	2	2	2	2	2	2
57	**Clamp**, Coil Core	10-50765	2	2	2	2	2	2	2	2	2	2	2	2	2	2	2	2	2	2

Table 11-8. S4LSC, S4RSC-21, -21T, -200, -201, -204, -204T and -205 Magnetos

Index	Description	Part No.	10-500514-1	10-500514-2	10-500514-3	10-500514-4	10-500514-5	10-500514-8	10-500514-201	10-600604-1	10-600614-1	10-600614-2	10-600614-3	10-600644-1	10-600644-3	10-600644-4	10-600644-5	10-600644-201	10-600644-202	10-600654-1
58	**Coil**	10-357165-1	1	1	1	1	1	1	1	1	1	1	1	1	1	1	1	1	1	1
59	**Seal**, Oil	10-400554	1	1	1	1	1	1	1	1	1	1	1	1	1	1	1	1	1	1
60	**Pin**, Stop	10-56513	2	2	2	2	2	2	2											
60	**Pin**, Stop, +0.0005 AO	10-400602	2	2	2	2	2	2	2											
61	**Screw**, w/lock washer	10-391213	1	1	1	1	1	1	1	1	1	1	1	1	1	1	1	1	1	1
62	**Washer**, Plain	10-51354	1	1	1	1	1	1	1	1	1	1	1	1	1	1	1	1	1	1
63	**Cam**	10-50772-4			1	1	1			1					1		1			1
		10-50772-5	1	1				1	1		1	1	1	1		1		1	1	
64	**Bearing**, Ball	2-202	1	1	1	1	1	1	1	1	1	1	1	1	1	1	1	1	1	1
65	**Washer**, Shim																			
	0.002 in. thick	2-199-1	AR	AR	AR	AR	AR	AR	AR	AR	AR	AR	AR	AR	AR	AR	AR	AR	AR	AR
	0.004 in. thick	2-199-2	AR	AR	AR	AR	AR	AR	AR	AR	AR	AR	AR	AR	AR	AR	AR	AR	AR	AR
	0.005 in. thick	2-199-3	AR	AR	AR	AR	AR	AR	AR	AR	AR	AR	AR	AR	AR	AR	AR	AR	AR	AR
	0.008 in. thick	2-199-4	AR	AR	AR	AR	AR	AR	AR	AR	AR	AR	AR	AR	AR	AR	AR	AR	AR	AR
	0.010 in. thick	2-199-5	AR	AR	AR	AR	AR	AR	AR	AR	AR	AR	AR	AR	AR	AR	AR	AR	AR	AR
	0.012 in. thick	2-199-6	AR	AR	AR	AR	AR	AR	AR	AR	AR	AR	AR	AR	AR	AR	AR	AR	AR	AR
66	**Washer**, Plain	10-3503	1	1	1	1	1	1	1	1	1	1	1	1	1	1	1	1	1	1
67	**Gear**, Pinion	10-157123Y	1	1	1	1	1	1	1	1	1	1	1	1	1	1	1	1	1	1
69	**Bearing**, Sleeve	10-25788	1	1	1	1	1	1	1	1	1	1	1	1	1	1	1	1	1	1
70	**Bearing**, Ball	10-81806	1	1	1	1	1	1	1	1	1	1	1	1	1	1	1	1	1	1
71	**Washer**, Shim																			
	0.002 in. thick	2-161-1	AR	AR	AR	AR	AR	AR	AR	AR	AR	AR	AR	AR	AR	AR	AR	AR	AR	AR
	0.004 in. thick	2-161-2	AR	AR	AR	AR	AR	AR	AR	AR	AR	AR	AR	AR	AR	AR	AR	AR	AR	AR
	0.005 in. thick	2-161-3	AR	AR	AR	AR	AR	AR	AR	AR	AR	AR	AR	AR	AR	AR	AR	AR	AR	AR
	0.008 in. thick	2-161-4	AR	AR	AR	AR	AR	AR	AR	AR	AR	AR	AR	AR	AR	AR	AR	AR	AR	AR
	0.010 in. thick	2-161-5	AR	AR	AR	AR	AR	AR	AR	AR	AR	AR	AR	AR	AR	AR	AR	AR	AR	AR
	0.012 in. thick	2-161-6	AR	AR	AR	AR	AR	AR	AR	AR	AR	AR	AR	AR	AR	AR	AR	AR	AR	AR
	0.0015 in. thick	2-161-7	AR	AR	AR	AR	AR	AR	AR	AR	AR	AR	AR	AR	AR	AR	AR	AR	AR	AR
72	**Kit**, Distributor Gear	10-357586	1	1	1	1	1	1	1	1	1	1	1	1	1	1	1	1	1	1
73	**Brush**, Carbon	10-160844	1	1	1	1	1	1	1	1	1	1	1	1	1	1	1	1	1	1
74	**Ring**, Retaining	MS16624-2037	1	1	1	1	1	1	1	1	1	1	1	1	1	1	1	1	1	1
75	**Washer** 0.750 OD	10-349511	1	1	1	1	1	1	1	1	1	1	1	1	1	1	1	1	1	1
76	**Washer**, 0.562 OD	10-606505	1	1	1	1	1	1	1	1	1	1	1	1	1	1	1	1	1	1
77	**Washer**, Nylon	10-391309	1	1	1	1	1	1	1	1	1	1	1	1	1	1	1	1	1	1
78	**Screw**, w/plain & lock washer	10-102083	3	3	3	3	3	3	3	3	3	3	3	3	3	3	3	3	3	3
79	**Block**, Distributor	10-357424	1	1	1	1	1	1	1	1	1	1	1	1	1	1	1	1	1	1
80	**Spring**, Tower	10-50737	4	4	4	4	4	4	4	4	4	4	4	4	4	4	4	4	4	4
81	**Strip**, Felt	10-163374	1	1	1	1	1	1	1	1	1	1	1	1	1	1	1	1	1	1
82	**Washer**, Felt	10-50752	1	1	1	1	1	1	1	1	1	1	1	1	1	1	1	1	1	1

Table 11-9. S6LSC, S6RSC, -21, -25, -25P, and 25T Magnetos

Index	Description	Part No.	10-500516-2	10-500516-3	10-500516-4	10-500516-5	10-500516-6	10-500516-7	10-500516-9	10-500516-10	10-500556-1	10-500556-3	10-500556-101	10-500556-103	10-500556-203	10-500556-901
1	**Pin**, Cotter	10-90751-18	1	1	1	1	1		1	1	1	1	1	1	1	1
		10-90751-19						1								
2	**Nut**, Drive Shaft	10-51643		1	1	1	1		1	1	1	1	1	1	1	1
		10-51652Y					1						1	1		
		10-163178	1													
3	**Washer**, Lock	10-3793		1	1	1	1	1	1	1	1	1	1	1	1	1
4	**Washer**, Plain	10-51370			1		1									
		10-116860	1			1					1					
		10-52307		1		1			1	1	1	1	1	1	1	1
		10-51613						1								
5	**Bushing**	10-51651						1								
		10-163048	1													
		10-357193			1		1				1					
8	**Coupling**, Impulse															
	30º Lag	10-400316										1		1	1	
	35º Lag	10-400303							1							
	45º Lag	10-400314			1					1						
	45º Lag	10-400315	1	1												
	35º Lag	10-400305				1										
	45º Lag	10-400306					1									
	30º Lag	10-400307									1		1			1
	35º Lag	10-400304						1								
9	**Body**, Impulse Coupling	10-51333					1		1							
		10-51395						1								
		10-52903			1					1						
		10-70371	1	1								1		1	1	
		10-76232				1					1		1			1
10	**Spring**, Main	10-51324	1	1	1	1	1	1	1	1	1	1	1	1	1	1
11	**Cam**	10-400166-6				1		1	1							
		10-400167-6										1		1	1	
		10-400167-10	1	1	1					1						
		10-400166-9					1									
		10-400166-4									1		1			1
12	**Screw**, w/lock washer	10-157160	4	4	4	4	4	4	4	4	4	4	4	4	4	4
14	**Gasket**	10-357532											1	1		1
15	**Cover**, Contact	10-400160-4											1	1		1
		10-400160-3	1	1	1	1	1	1	1	1	1	1				
		10-400160-7													1	
16	**Washer**, Lock	MS35338-43	1	1	1	1	1	1	1	1	1	1	1	1	1	1
17	**Lead Assembly**, Tach	10-400141													2	

Table 11-9. S6LSC, S6RSC, -21, -25, -25P, and 25T Magnetos

Index	Description	Part No.	10-500516-2	10-500516-3	10-500516-4	10-500516-5	10-500516-6	10-500516-7	10-500516-9	10-500516-10	10-500556-1	10-500556-3	10-500556-101	10-500556-103	10-500556-203	10-500556-901
18	**Sleeving**	654742-2-.50													1	
19	**Grommet**, Tach.	10-400103													1	
25	**Screw**, w/lock washer	10-35937-12	4	4	4	4	4	4	4	4	4	4	4	4	4	4
28	**Nut**	MS35650-302	1	1	1	1	1	1	1	1	1	1	1	1	1	1
34	**Gasket**	10-357520											1	1		1
36	**Packing**	10-349263	1	1	1	1	1	1	1	1	1	1	1	1	1	1
37	**Washer**, Plain	10-14268	1	1	1	1	1	1	1	1	1	1	1	1	2	1
		NAS620-8L													1	
38	**Bushing**, Tach.	10-361639													2	
39	**Contact Assembly**	10-382585	1	1	1					1		1		1	1	
		10-382584				1	1	1	1		1		1			1
	(Tachometer)	10-400507													1	
40	**Plate**, Insulating, Tach.	10-361624													1	
41	**Screw**, w/lock washer	10-35935-7	2	2	2	2	2	2	2	2	2	2	2	2	4	2
41a	**Screw**, w/lock washer	10-35935-6	2	2	2	2	2	2	2	2	2	2	2	2	2	2
42	**Capacitor**	10-400615	1	1	1	1	1	1	1	1	1	1	1	1	1	1
44	**Plug**, Solid	10-157135	1	1	1	1	1	1	1	1	1	1	1	1	1	1
46	**Plug**, Ventilator	10-157134	1	1	1	1	1	1	1	1	1	1			1	
46a	**Orifice**, Air Bleed	10-382861											1	1		
47	**Screw**, w/lock washer	10-157158	5	5	5	5	5	5	5	5	5	5	5	5	5	5
48	**Housing**, Distributor	10-400551-7	1	1	1					1		1		1	1	
		10-400551-8				1	1	1	1		1		1			1
49	**Gasket**	10-357533											1	1		1
50	**Housing**, Magneto	10-400549-1	1	1	1					1						
		10-400549-2				1	1	1	1							
		10-400552-1										1		1	1	
		10-400552-2									1		1			
		10-400552-5														1
52	**Plate**, Data	10-400012	1	1	1	1	1	1	1	1	1	1	1	1	1	1
53	**Key**, Woodruff	10-90788-5	3	2	3	2	3	3	2	2	3	2	2	2	2	2
54	**Magnet**, Rotating (Rotor)	10-52946						1								
		10-52947	1		1		1									
		10-52948		1		1			1	1	1	1	1	1	1	1
55	**Slinger**, Oil	10-51678	1	1	1	1	1	1	1	1	1	1	1	1	1	1
56	**Screw**, w/lock washer	10-35937-8	2	2	2	2	2	2	2	2	2	2	2	2	2	2
57	**Clamp**, Coil Core	10-50765	2	2	2	2	2	2	2	2	2	2	2	2	2	2
58	**Coil**	10-357165-1	1	1	1	1	1	1	1	1	1	1	1	1	1	1
59	**Seal**, Oil	10-400554	1	1	1	1	1	1	1	1	1	1	1	1	1	1
60	**Pin**, Stop	10-56513	2	2	2	2	2	2	2	2						
		10-79011									2	2	2	2	2	2

Table 11-9. S6LSC, S6RSC, -21, -25, -25P, and 25T Magnetos

Index	Description	Part No.	10-500516-2	10-500516-3	10-500516-4	10-500516-5	10-500516-6	10-500516-7	10-500516-9	10-500516-10	10-500556-1	10-500556-3	10-500556-101	10-500556-103	10-500556-203	10-500556-901
	Pin, Stop, +0.0005 AO	10-400602	2	2	2	2	2	2	2	2						
		10-400603									2	2	2	2	2	2
61	**Screw**, w/lock washer	10-391213	1	1	1	1	1	1	1	1	1	1	1	1	1	1
62	**Washer**, Plain	10-51354	1	1	1	1	1	1	1	1	1	1	1	1	1	1
63	**Cam**	10-50772-4				1	1	1	1	1	1		1			1
		10-50772-5	1	1	1							1		1	1	
64	**Bearing**, Ball	2-202	1	1	1	1	1	1	1	1	1	1	1	1	1	1
65	**Washer**, Shim															
	0.002 in. thick	2-199-1	AR	AR	AR	AR	AR	AR	AR	AR	AR	AR	AR	AR	AR	AR
	0.004 in. thick	2-199-2	AR	AR	AR	AR	AR	AR	AR	AR	AR	AR	AR	AR	AR	AR
	0.005 in. thick	2-199-3	AR	AR	AR	AR	AR	AR	AR	AR	AR	AR	AR	AR	AR	AR
	0.008 in. thick	2-199-4	AR	AR	AR	AR	AR	AR	AR	AR	AR	AR	AR	AR	AR	AR
	0.010 in. thick	2-199-5	AR	AR	AR	AR	AR	AR	AR	AR	AR	AR	AR	AR	AR	AR
	0.012 in. thick	2-199-6	AR	AR	AR	AR	AR	AR	AR	AR	AR	AR	AR	AR	AR	AR
66	**Washer**, Plain	10-3503	1	1	1	1	1	1	1	1	1	1	1	1	1	1
67	**Gear**, Pinion	10-157120Y	1	1	1	1	1	1	1	1	1	1	1	1	1	1
69	**Bearing**, Sleeve	10-25788	1	1	1	1	1	1	1	1	1	1	1	1	1	1
70	**Bearing**, Ball	10-81806	1	1	1	1	1	1	1	1	1	1	1	1	1	1
71	**Washer**, Shim															
	0.002 in. thick	2-161-1	AR	AR	AR	AR	AR	AR	AR	AR	AR	AR	AR	AR	AR	AR
	0.004 in. thick	2-161-2	AR	AR	AR	AR	AR	AR	AR	AR	AR	AR	AR	AR	AR	AR
	0.005 in. thick	2-161-3	AR	AR	AR	AR	AR	AR	AR	AR	AR	AR	AR	AR	AR	AR
	0.008 in. thick	2-161-4	AR	AR	AR	AR	AR	AR	AR	AR	AR	AR	AR	AR	AR	AR
	0.010 in. thick	2-161-5	AR	AR	AR	AR	AR	AR	AR	AR	AR	AR	AR	AR	AR	AR
	0.012 in. thick	2-161-6	AR	AR	AR	AR	AR	AR	AR	AR	AR	AR	AR	AR	AR	AR
	0.0015 in. thick	2-161-7	AR	AR	AR	AR	AR	AR	AR	AR	AR	AR	AR	AR	AR	AR
72	**Kit**, Distributor Gear	10-357586	1	1	1	1	1	1	1	1	1	1	1	1	1	1
73	**Brush**, Carbon	10-160844	1	1	1	1	1	1	1	1	1	1	1	1	1	1
74	**Ring**, Retaining	MS16624-2037	1	1	1	1	1	1	1	1	1	1	1	1	1	1
75	**Washer** 0.750 OD	10-349511	1	1	1	1	1	1	1	1	1	1	1	1	1	1
76	**Washer**, 0.562 OD	10-606505	1	1	1	1	1	1	1	1	1	1	1	1	1	1
77	**Washer**, Nylon	10-391309	1	1	1	1	1	1	1	1	1	1	1	1	1	1
78	**Screw**, w/Plain & Lock washer	10-102083	3	3	3	3	3	3	3	3	3	3	3	3	3	3
79	**Block**, Distributor	10-357426	1	1	1	1	1	1	1	1	1	1	1	1	1	1
80	**Spring**, Tower	10-50737	6	6	6	6	6	6	6	6	6	6	6	6	6	6
81	**Strip**, Felt	10-163374	1	1	1	1	1	1	1	1	1	1	1	1	1	1
82	**Washer**, Felt	10-50752	1	1	1	1	1	1	1	1	1	1	1	1	1	1

Table 11-10. S6LSC, S6RSC-200, 200P, -201, -204, -204P, -204T and -205 Magnetos

Index	Description	Part No.	10-600606-1	10-600606-3	10-600616-3	10-600616-4	10-600616-5	10-600616-6	10-600616-7	10-600616-9	10-600616-101	10-600646-1	10-600646-2	10-600646-3	10-600646-4	10-600646-101	10-600646-201	10-600656-1	10-600656-3
1	**Pin**, Cotter	10-90751-18	1	1	1	1	1	1	1	1	1	1	1	1	1	1	1	1	1
2	**Nut**, Drive Shaft	10-163151				1	1		1				1		1				
		10-51643	1	1				1						1				1	1
		10-163178			1					1	1	1				1	1		
3	**Washer**, Lock	10-3793	1	1				1						1				1	1
4	**Washer**, Plain	10-4093	1	1		1	1		1			1	1		1			1	1
		10-116860						1					1						
5	**Bushing**	10-163048			1					1	1	1				1	1		
		10-357193						1					1						
7	**Plate**, Drive	10-163003	1	1			1											1	1
		10-163216						1						1					
12	**Screw**, w/lock washer	10-157160	4	4	4	4	4	4	4	4	4	4	4	4	4	4	4	4	4
14	**Gasket**	10-357532									1					1			
15	**Cover**, Contact	10-400160-1	1	1	1	1	1	1	1	1									
		10-400160-2									1								
		10-400160-3										1	1	1	1			1	1
		10-400160-4														1			
		10-400160-7															1		
16	**Washer**, Lock	MS35338-43	2	2	2	2	2	2	2	2	2	1	1	1	1	1	1	1	1
17	**Lead Assembly**, Tach	10-400141															2		
18	**Sleeving**	654742-2-.50															1		
19	**Grommet**, Tach.	10-400103															1		
23a	**Lead Assembly**, Retard	10-400050	1	1	1	1	1	1	1	1	1								
25	**Screw**, w/lock washer	10-35937-12	5	5	5	5	5	5	5	5	4	4	4	4	4	4	4	4	4
26	**Washer**, Insulating	10-16092	1	1	1	1	1	1	1	1	1								
27	**Bushing**, Insulating	10-125996	1	1	1	1	1	1	1	1	1								
28	**Nut**	MS35650-302	3	3	3	3	3	3	3	3	3	1	1	1	1	1	1	1	1
34	**Gasket**	10-357520									1					1			
36	**Packing**	10-349263	1	1	1	1	1	1	1	1	1	1	1	1	1	1	1	1	1
37	**Washer**, Plain	10-14268	2	2	2	2	2	2	2	2	2	1	1	1	1	1	2	1	1
		NAS620-8L															1		
38	**Bushing**, Tach.	10-361639															2		
39	**Contact Assembly**	10-382585	1	1	1	1	1	1	1	1	1	1	1	1		1	1		1
		10-382584	1	1	1	1	1	1	1	1	1				1			1	
	(Tachometer)	10-400507															1		
40	**Plate**, Insulating, Tach.	10-361624																1	
41	**Screw**, w/lock washer	10-35935-6	2	2	2	2	2	2	2	2	2	2	2	2	2	2	2	2	2
41a	**Screw**, w/lock washer	10-35936-7	4	4	4	4	4	4	4	4	4	2	2	2	2	2	4	2	2
42	**Capacitor**	10-400615	1	1	1	1	1	1	1	1	1	1	1	1	1	1	1	1	1

Table 11-10. S6LSC, S6RSC-200, 200P, -201, -204, -204P, -204T and -205 Magnetos

Index	Description	Part No.	10-600606-1	10-600606-3	10-600616-3	10-600616-4	10-600616-5	10-600616-6	10-600616-7	10-600616-9	10-600616-101	10-600646-1	10-600646-2	10-600646-3	10-600646-4	10-600646-101	10-600646-201	10-600656-1	10-600656-3
44	**Plug**, Solid	10-157135	1	1	1	1	1	1	1	1		1	1	1	1	1	1	1	1
44a	**Bushing**, Air Inlet	10-382815									1					1			
46	**Plug**, Ventilator	10-157134	1	1	1	1	1	1	1	1		1	1	1	1		1	1	1
46a	**Orifice**, Calibrated	10-382861									1					1			
47	**Screw**, w/lock washer	10-157158	5	5	5	5	5	5	5	5	5	5	5	5	5	5	5	5	5
48	**Housing**, Distributor	10-400551-4			1														
		10-400551-6							1										
		10-400551-7		1			1	1		1	1	1	1	1		1	1		1
		10-400551-8	1			1									1			1	
49	**Gasket**, Housing	10-357533									1					1			
50	**Housing**, Magneto	10-400552-4	1	1														1	1
		10-400549-4			1	1	1	1	1	1	1	1	1	1	1	1	1		
52	**Plate**, Data	10-400012	1	1	1	1	1	1	1	1	1	1	1	1	1	1	1	1	1
53	**Key**, Woodruff	10-90788-5	2	2	3	2	2	3	3	3	3	3	2	3	2	3	3	2	2
54	**Magnet**, Rotating (Rotor)	10-52945				1	1		1				1		1				
		10-52947			1			1		1	1	1		1		1	1		
		10-52948	1	1														1	1
55	**Deflector**, Oil	10-51678	1	1	1	1	1	1	1	1	1	1	1	1	1	1	1	1	1
56	**Screw**, w/lock washer	10-35937-8	2	2	2	2	2	2	2	2	2	2	2	2	2	2	2	2	2
57	**Clamp**, Coil Core	10-50765	2	2	2	2	2	2	2	2	2	2	2	2	2	2	2	2	2
58	**Coil**	10-357165-1	1	1	1	1	1	1	1	1	1	1	1	1	1	1	1	1	1
59	**Seal**, Oil	10-400554	1	1	1	1	1	1	1	1	1	1	1	1	1	1	1	1	1
61	**Screw**, w/lock washer	10-391213	1	1	1	1	1	1	1	1	1	1	1	1	1	1	1	1	1
62	**Washer**, Plain	10-51354	1	1	1	1	1	1	1	1	1	1	1	1	1	1	1	1	1
63	**Cam**	10-50772-4	1			1			1						1			1	
		10-50772-5		1	1		1	1		1	1	1	1	1		1	1		1
64	**Bearing**, Ball	2-202	1	1	1	1	1	1	1	1	1	1	1	1	1	1	1	1	1
65	**Washer**, Shim																		
	0.002 in. thick	2-199-1	AR	AR	AR	AR	AR	AR	AR	AR	AR	AR	AR	AR	AR	AR	AR	AR	AR
	0.004 in. thick	2-199-2	AR	AR	AR	AR	AR	AR	AR	AR	AR	AR	AR	AR	AR	AR	AR	AR	AR
	0.005 in. thick	2-199-3	AR	AR	AR	AR	AR	AR	AR	AR	AR	AR	AR	AR	AR	AR	AR	AR	AR
	0.008 in. thick	2-199-4	AR	AR	AR	AR	AR	AR	AR	AR	AR	AR	AR	AR	AR	AR	AR	AR	AR
	0.010 in. thick	2-199-5	AR	AR	AR	AR	AR	AR	AR	AR	AR	AR	AR	AR	AR	AR	AR	AR	AR
	0.012 in. thick	2-199-6	AR	AR	AR	AR	AR	AR	AR	AR	AR	AR	AR	AR	AR	AR	AR	AR	AR
66	**Washer**, Plain	10-3503	1	1	1	1	1	1	1	1	1	1	1	1	1	1	1	1	1
67	**Gear**, Pinion	10-157120Y	1	1	1	1	1	1	1	1	1	1	1	1	1	1	1	1	1
69	**Bearing**, Sleeve	10-25788	1	1	1	1	1	1	1	1	1	1	1	1	1	1	1	1	1
70	**Bearing**, Ball	10-81806	1	1	1	1	1	1	1	1	1	1	1	1	1	1	1	1	1

Table 11-10. S6LSC, S6RSC-200, 200P, -201, -204, -204P, -204T and -205 Magnetos

Index	Description	Part No.	10-600606-1	10-600606-3	10-600616-3	10-600616-4	10-600616-5	10-600616-6	10-600616-7	10-600616-9	10-600616-101	10-600646-1	10-600646-2	10-600646-3	10-600646-4	10-600646-101	10-600646-201	10-600656-1	10-600656-3
71	**Washer**, Shim																		
	0.002 in. thick	2-161-1	AR	AR	AR	AR	AR	AR	AR	AR	AR	AR	AR	AR	AR	AR	AR	AR	AR
	0.004 in. thick	2-161-2	AR	AR	AR	AR	AR	AR	AR	AR	AR	AR	AR	AR	AR	AR	AR	AR	AR
	0.005 in. thick	2-161-3	AR	AR	AR	AR	AR	AR	AR	AR	AR	AR	AR	AR	AR	AR	AR	AR	AR
	0.008 in. thick	2-161-4	AR	AR	AR	AR	AR	AR	AR	AR	AR	AR	AR	AR	AR	AR	AR	AR	AR
	0.010 in. thick	2-161-5	AR	AR	AR	AR	AR	AR	AR	AR	AR	AR	AR	AR	AR	AR	AR	AR	AR
	0.012 in. thick	2-161-6	AR	AR	AR	AR	AR	AR	AR	AR	AR	AR	AR	AR	AR	AR	AR	AR	AR
	0.0015 in. thick	2-161-7	AR	AR	AR	AR	AR	AR	AR	AR	AR	AR	AR	AR	AR	AR	AR	AR	AR
72	**Kit**, Distributor Gear	10-357586	1	1	1	1	1	1	1	1	1	1	1	1	1	1	1	1	1
73	**Brush**, Carbon	10-160844	1	1	1	1	1	1	1	1	1	1	1	1	1	1	1	1	1
74	**Ring**, Retaining	MS16624-2037	1	1	1	1	1	1	1	1	1	1	1	1	1	1	1	1	1
75	**Washer** 0.750 OD	10-349511	1	1	1	1	1	1	1	1	1	1	1	1	1	1	1	1	1
76	**Washer**, 0.562 OD	10-606505	1	1	1	1	1	1	1	1	1	1	1	1	1	1	1	1	1
77	**Washer**, Nylon	10-391309	1	1	1	1	1	1	1	1	1	1	1	1	1	1	1	1	1
78	**Screw**, w/plain & lock washer	10-102083	3	3	3	3	3	3	3	3	3	3	3	3	3	3	3	3	3
79	**Block**, Distributor	10-357426	1	1	1	1	1	1	1	1	1	1	1	1	1	1	1	1	1
80	**Spring**, Tower	10-50737	6	6	6	6	6	6	6	6	6	6	6	6	6	6	6	6	6
81	**Strip**, Felt	10-163374	1	1	1	1	1	1	1	1	1	1	1	1	1	1	1	1	1
82	**Washer**, Felt	10-50752	1	1	1	1	1	1	1	1	1	1	1	1	1	1	1	1	1

11-4. Switch Terminal Kits

(See Table 11-1 for Application)

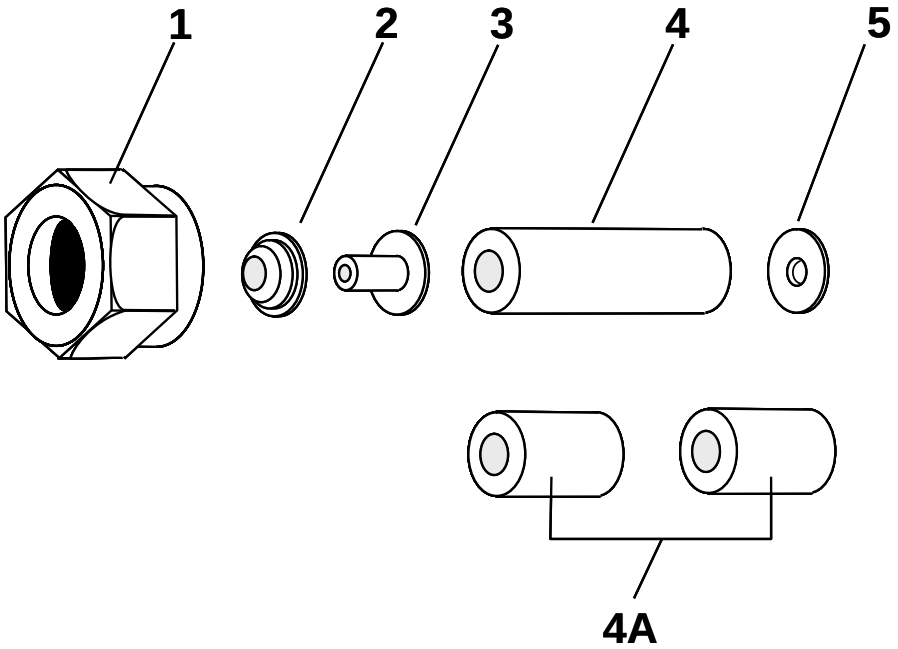

Figure 11-1. Kit 10-52305 & 10-52305-1

Table 11-11. Terminal Kit Spares

Figure 11-1 Index	Part No.	Description	Quantity Required
1	10-37669	**Nut** – Coupling (Ground Terminal)	1
2	10-7030	**Ferrule** – Outer (Ground Wire)	1
3	10-7029	**Ferrule** – Inner (Ground Wire)	1
4	10-37668	**Sleeve** – Insulating (10-52305)	1
4A	10-52901	**Sleeve** – Insulating (10-52305-1)	2
5	2-155	**Washer** – Ground Wire Contact	1

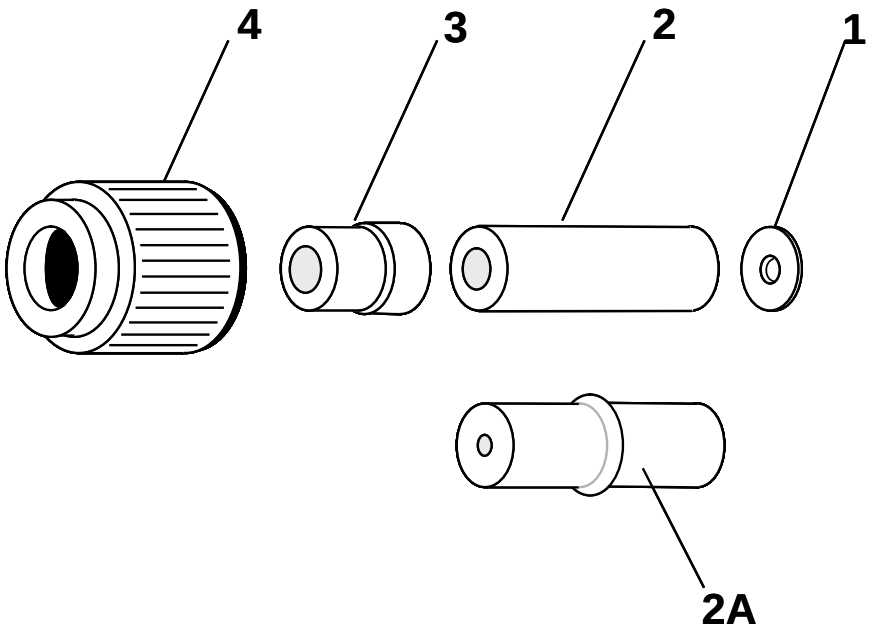

Figure 11-2. Kit 10-157208, 10-157209 & 10-382814

Table 11-12. Terminal Kit Spares

Figure 11-2 Index	Part Number	Description	Use Code	Quantity Required
1	10-77092	**Washer**, Plain	A, B & C	1
2	10-157212	**Bushing**, Insulated	A & B	1
2A	10-382812	**Insulator**	C	1
3	10-157213	**Bushing**, Shouldered	A, B & C	1
4	10-157210	**Nut**, Coupling 0.3750-32 (10-157208)	A	1
	10-157211	**Nut**, Coupling 0.4375-28 (10-157209)	B & C	1

Table 11-13. Switch Terminal ("P-Lead") Kits

Kit Number	Description	Application	Code
10-157208	**Kit**, Magneto Retard Terminal	One each for unpressurized magnetos with retard contacts	A
10-157209	**Kit**, Magneto Ground Terminal	One each per magneto	B
10-382814	**Kit**, Pressurized Magneto Ground Terminal	One each for pressurized magneto	C

Continental Motors, Inc.

www.continentalmotors.aero